ABREMAQ
PODER PARA TRANSFORMAR
DISTRIBUIDOR AUTORIZADO

PIONEER

PIONEER N.A., INC.

PIONEER TOOL HOLDING SOLUTIONS

2020 CATALOG

Revised August, 2020

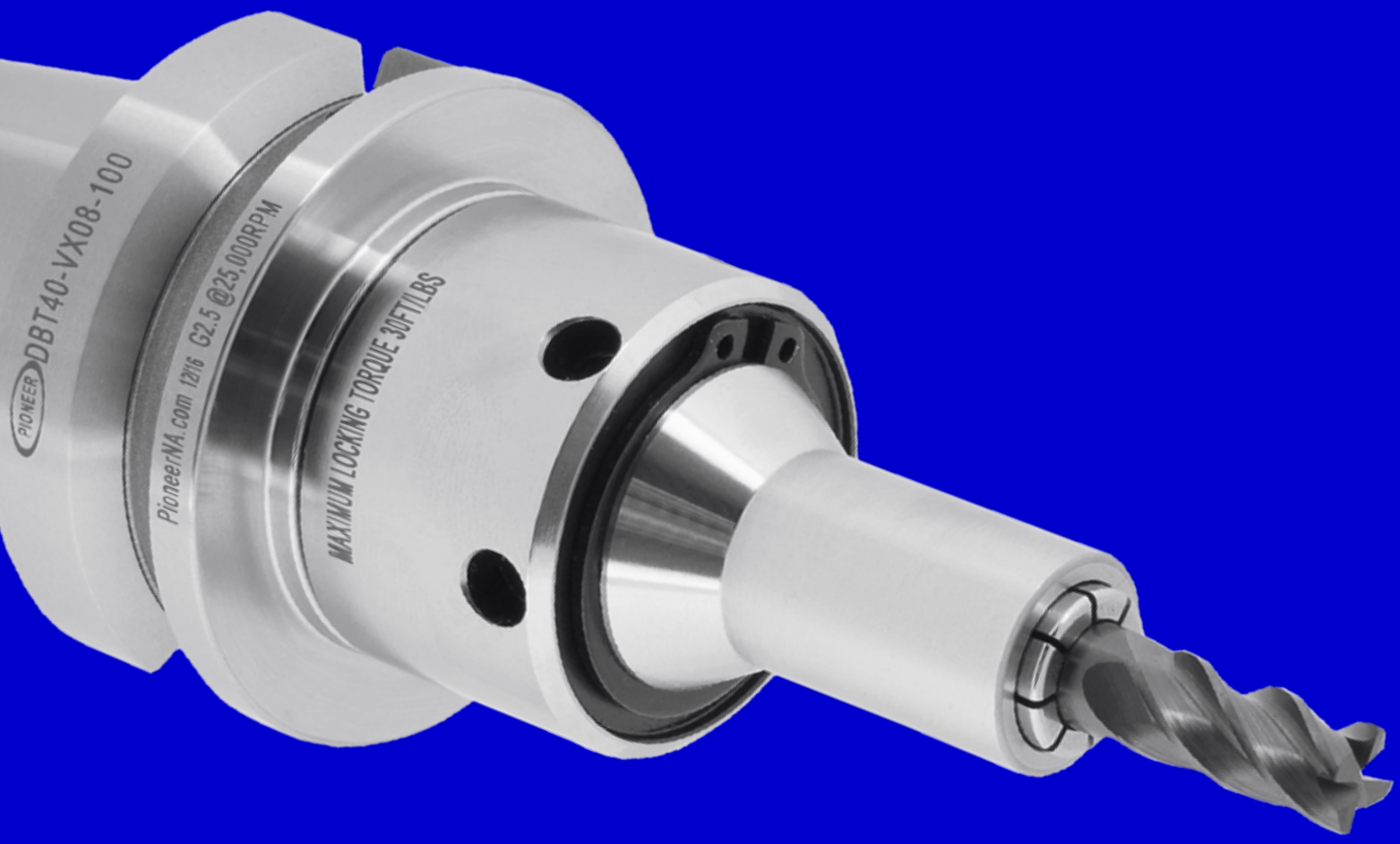

PIONEER DUAL CONTACT

What is Dual Contact

Dual Contact spindle gageline is ground to a controlled dimension to the taper of the spindle and tool holder. Standard spindles have a 0.078”/0.125” gap from the back of the tool holder flange to the spindle face. Dual contact reduces the gap to microns.

How is Dual Contact Effective

If enough side pressure (radial load) is applied to a milling tool it will cause the tool taper to disengage from the spindle, causing the tool to dog tail, effecting assembly runout and rigidity. Dual Contact uses the face of the spindle for additional support creating a higher displacement pressure point allowing the machine to operate at a higher radial load. The amount of pressure is dependent on the draw bar system in the machine. Lower draw bar pressure machines will see a greater improvement in side load applications than higher machines.

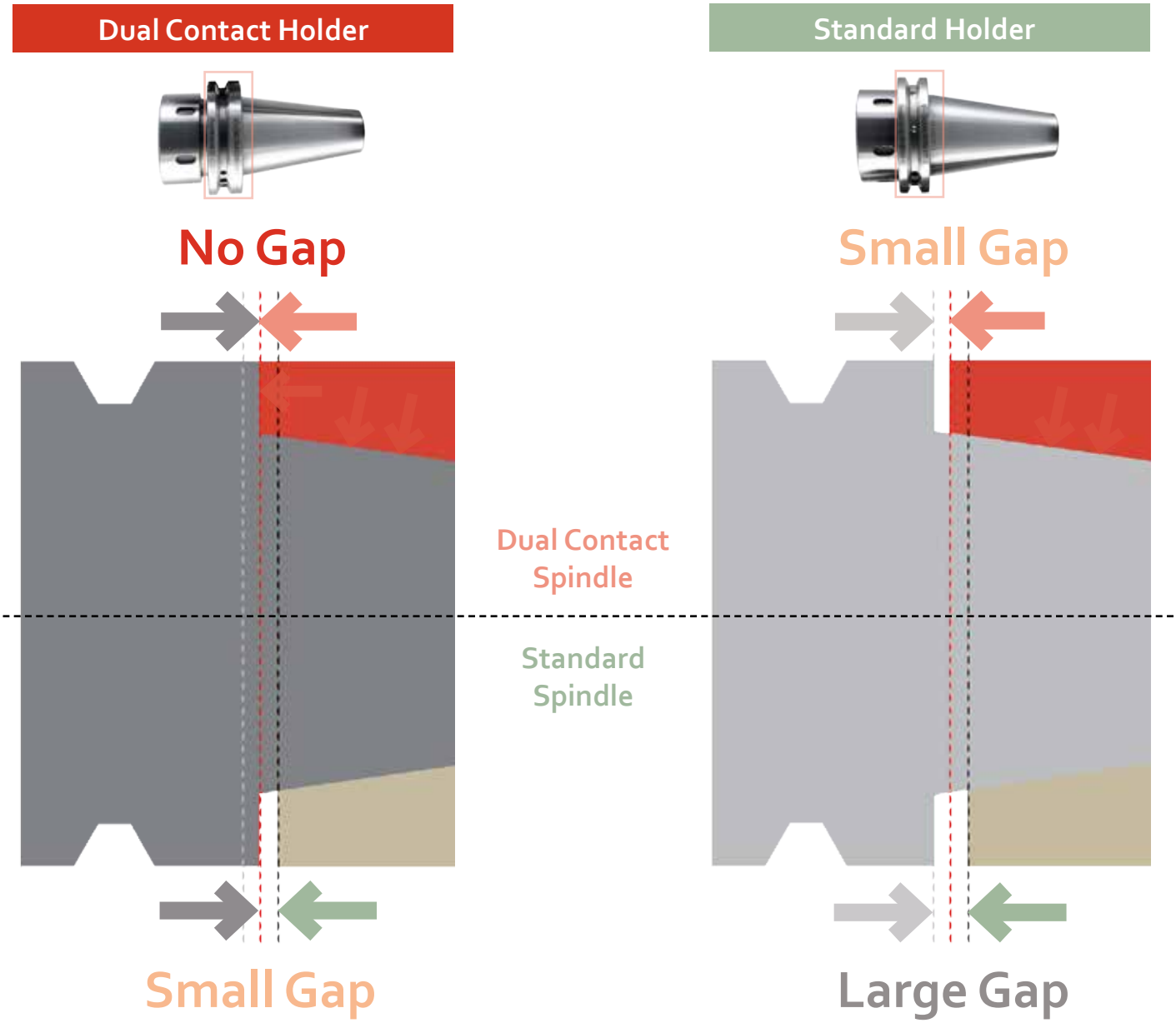

Verify Machine Spindle warrantee and Machine Tool manufacturers recommendation when using standard tooling in Dual Contact Spindles. *Standard tooling can wear dual contact spindle tapers causing dual contact tooling to lock on the face before locking on the taper requiring a spindle repair to regain taper & face lockup. The reverse is also true, Dual Contact tooling used in standard spindles can wear the taper of the dual contact tool holder and cause lock up issues over time when used in dual contact spindles.*

PERFORMANCE MILLING

OTHER PRODUCTS

PERFORMANCE DRILLING

SX Collet Chucks—26

SD Shrink Fit Holders—44

VX Collet Chucks—14

MX Collet Chucks—20

ER Collet Chucks—72

TG Collet Chucks—130

PERFORMANCE TAPPING

PT Precision Sync Tap—84

ER Collet Chucks—72

QC Tapping—122

OTHER PRODUCTS

Rotary Wipers—141

Rotary Indexers—144

EDM Indexers—158

Balanced Tooling

In todays manufacturing balance in more important than ever. Spindle speeds are increasing, cutting tools are designed to run a greater RPM's.

Understanding balance is key to spindle and cutting tool life.

Any assembly running over 5,000 RPM will require some form of balance compensation. The higher the speed, the finer the balance requirement.

Causes of Unbalance

1. Flaws in the base material
2. Poor tolerances during fabrication
3. Out of roundness
4. Improper placement of through holes
5. Any machining performed on the tool holder that diminishes the absolute concentricity about the rotational axis contributes to unbalance
6. Asymmetrical tool holder design
7. Out of balance cutting tools (variable helix, variable pitch)
8. Deformation from over tightening retention knobs, coolant tube, screws or collet nuts.

Effective Balance

There is an understanding that needs to be corrected in the industry. If I purchased balanced holders my "tools" are balanced. Machine tool companies state in warranties the "tooling" must be balanced. Tooling referring to the assembly not just 1 piece. Consider a wheel on your automobile. The tool holder is the rim, the cutting tool is the tire. When you purchase tires they always balance the wheel once the tire is assembled and you have to re-balance as the tire wears. The same is true for tooling.

If I balance only the holder then add the weight of the accessories need to use that tool holder, most likely my center of gravity has moved and I am no longer in balance. Anyone who has been around balancing machines knows that any change in weight usually takes the assembly out of balance. Remember we are talking about measuring grams per mm, a very small amount can affect a tool at 15,000 RPM.

Consider the other argument, I take my balanced tooling then put the cutter into a side load with cutting forces against 1 side of the cutting tool, am I still balanced? The machine spindle warranty requires fine balance but the application creates an unbalanced condition. How critical is the fine balance?

Cutting Tool Geometry

Consider variable pitch / variable helix cutting tools. They create less vibration and better finish because the design is not symmetrical, 1 flue it thicker than the others. If it is not symmetrical is it balanced? If yes what is the certified balance grade and RPM?

We know that balancing all individual components for a higher than required speed does not mean the assembly will be balanced. There are still tolerances and weight distribution issues to consider.

The center of gravity

Tool holder manufactures cannot pre-balance collet chucks for example and guarantee results due to the unknown size, length and preset projection of the cutting tool. If I pre-balance for a 1/2" solid carbide end mill x 4" and a 6" is used, the weight has increased and also the distance that weight was placed from the face of the chuck moving the center of gravity. What if I pre-balance for 1/2" and a 1/8 is used? 1" is used? This is why it is impossible for any tool holder company to guarantee balance unless the tool is assembled and balanced prior to usage.

Balance Correction

Once we assemble our "balanced" components depending on the weight and length of the components there is a shift in the Mass Axis of the holder. To correct any movement or error we need to determine how much correction is required.

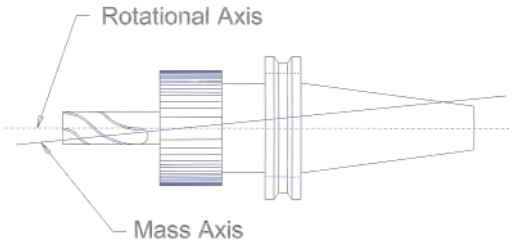

Balance Calculations

The industry uses ANSI S2.19-1989 balancing grade system to determine the "G" rating to use for machine spindles and tooling.

To make this correction you need to know the following:

- U = Maximum allowable unbalance in gr-mm
- W = Total weight of the assembly in kilograms (kg)
- G = Required "G" rating
- RPM = The operating speed for this assembly

Applied with a 9549 constant you use the following formula to calculate your allowable unbalance.

U = (G x 9549 x W) / RPM

Calculation of "G" 2.5 for a #40 Taper ER16 Assembly with a weight of 2.75 lbs (1.247 kg) at 8,000 and 20,000 rpm a general expression for G2.5 works out to the following:

U = (2.5 x 9549 x 1.247) / RPM

Solving these expressions for 8,000 rpm and 20,000 rpm range shows:

Unbalance for G 2.5 at 8,000 rpm = 3.72 gr-mm

Unbalance for G 2.5 at 20,000 rpm = 1.49 gr-mm

If our assembly checks within the gr-mm for the operating RPM no correction is required.

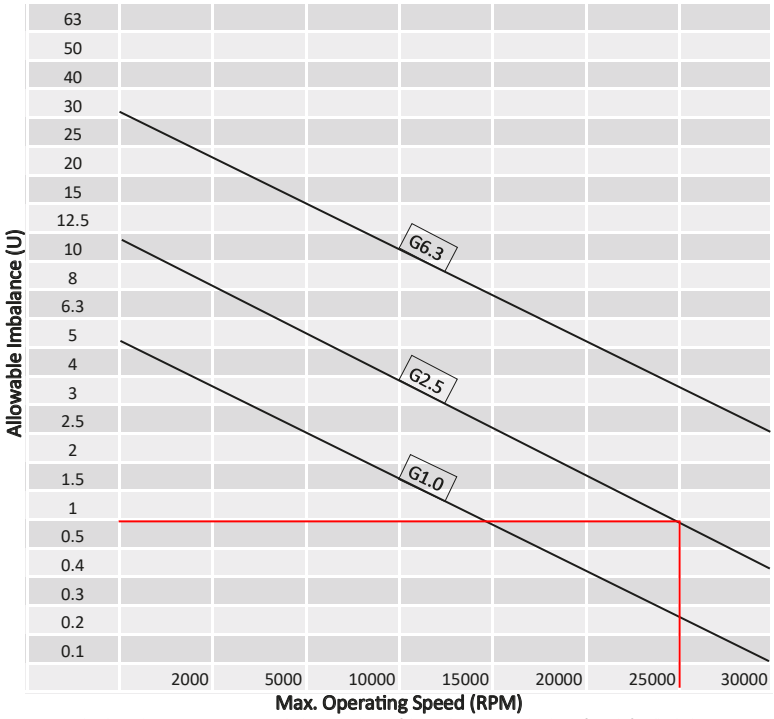

The above chart is a representation only due to size limits of the catalog page, use the shown formula for all calculations.

Balance Machine Limits

An issue that presents in modern manufacturing today is the balance requirements compared to the balance machine limits. Balancing machines today have a sensitivity of +/-0.5 gr-mm or total of 1 gr-mm. This means the total assembly weight must be high enough for the machine to sense to allow accurate balance of the assembly or in other words, the machine cannot guarantee results under 1 gr-mm.

In the chart below we show how the lighter weight assemblies can only be certified to certain RPM's due to the available limits of the balancing machine. This is also why it is important on light tooling like HSK32E, BT30, etc… are balanced as an assembly for high speed applications. If the cutting tool is not present the weight is reduced causing a lower than desired
actual balance.
The balancing machine manufactures who sell tool holders state "balanced to G2.5 @ 25,000 RPM or >/= 1 gr-mm" on their holder products.

gr-mm by Holder Weight & Application RPM (U) *(numbers in red are outside the balance machine limits)*

Assy Weight LBS											
	3	3.25	2.7	2.32	2.03	1.8	1.62	1.48	1.35	1.25	1.08
	2	2.17	1.8	1.55	1.35	1.2	1.08	0.98	0.9	0.83	0.72
	1.5	1.62	1.35	1.16	1.01	0.9	0.81	0.74	0.68	0.62	0.54
	1	1.08	0.9	0.77	0.68	0.6	0.54	0.49	0.45	0.42	0.36
		10000	12000	14000	16000	18000	20000	22000	24000	26000	30000
		RPM									

BC Mill Chuck Premium Performance

- 0.0002” TIR Guaranteed @ 50mm (2”)
- Eliminating wear components & easy to clean
- Solid Shoulder Design prevents over tightening
- Smaller OD than Traditional Mill Chucks
- Sealed bore design for high pressure applications
- Over 400 ft/lbs of radial torque on 1.25” Carbide Shanks
- Unlike materials & mass dampen cutting harmonics
- Designed for Performance Milling with Neutral to 30° flute geometry, not designed for hi-helix applications
- Tapers are ground better than AT3 for optimal T.I.R.

Bearingless Mill Chuck Design Features

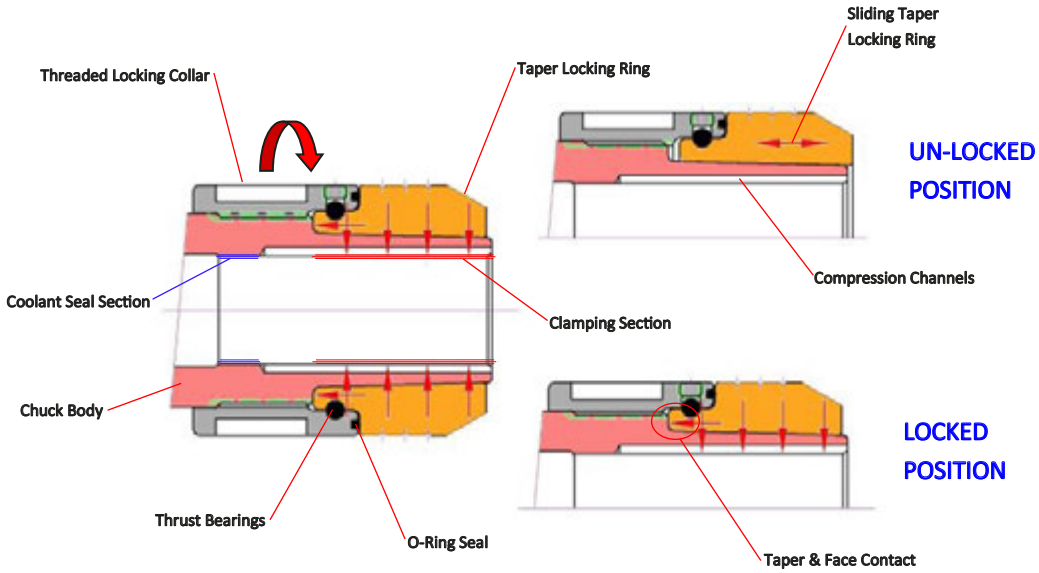

Non Pull Out

For Volume & High Feed Milling

The NP Milling System provides a cost effective solution to prevent cutter pull out. Designed to work with any standard Weldon flat, the system can be adapted to other flat styles and radial grooves.

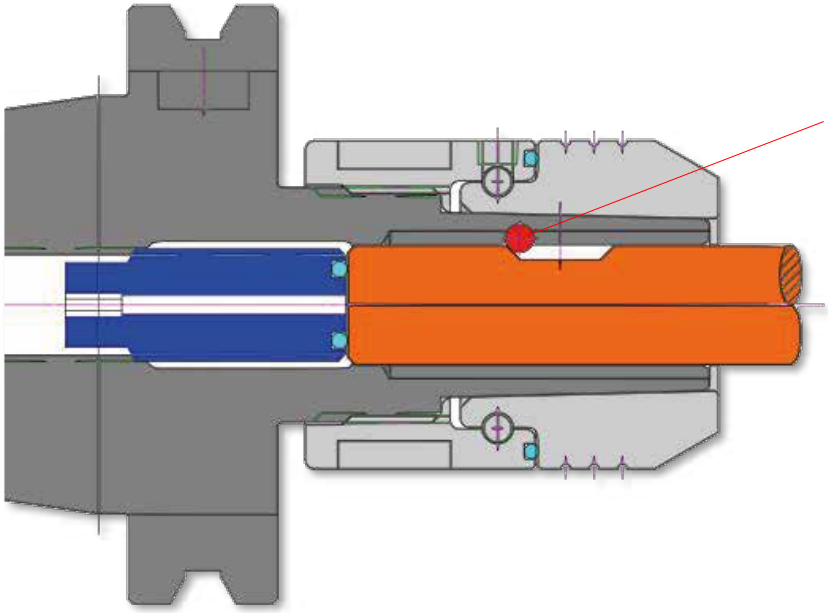

Pioneer modifies a standard BC Mill Chuck by EDM, allowing for quick delivery and special configurations in under a week.

The result is a 100% Non-Pull out holder with all the vibration dampening of a Mill Chuck for improved cutter performance.

Combined with the BC Chucks vibration dampening and you have a cost effective performance combination.

How to assemble Non-Pull Out

Insert the End mill, orientate the flat to the cross hole

Insert the Hardened Dowel Pin

Grease Taper & Assemble the Lock Nut, Hand Tight

Adjust and Tighten the Preset Screw until tight against the Dowel Pin

Tighten the Lock Nut in a Locking Fixture

BT30 & BT40 Bearing-less Mill Chucks

Features

- 5 µm - 0.0002" Runout @ 2 x Cutter Shank Dia.
- Works in both Standard and Dual Contact Spindles
- Designed for Tool Shanks w/ ISO h6 Class Tolerance
- Tapers are ground better than AT3 for optimal T.I.R.
- Sealed by Design for High Pressure Coolant
- Balanced for use @ 20,000 RPM

Optional (Order Separately):

- Torque Wrench
- Nylon Screw Seal for short tool shanks
- DIN-B Flange Coolant
- Jet-Blast Coolant Ports (for Solid Tooling)
- Fine Trim Balance
  (Sample cutter required for balance compensation)
- For Non-Pull Out add –NP to the part number

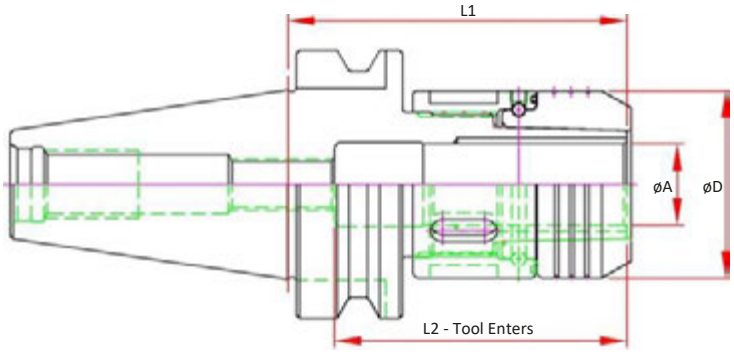

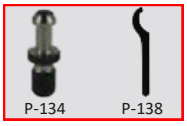

Note: BC Holders do "work in". Meaning the first couple of uses will require additional tightening torque.

Dual Contact Spindle Part Number	A Bore	D	L1 Projection	L2 Tool Enters	Coolant Seal Depth (Min. Shank Length)	Optional Preset Screw	Optional Torque Wrench Head	Grease & Torque
BT30-BC050-0268-B	0.5000	1.38	2.68	2.36	1.38	ASC-12-30	TWSQ050-S38	100 ft/lbs
BT30-BC062-0268-B	0.6250	1.50	2.68	2.36	1.38	ASC-12-30	TWSQ050-S38	120 ft/lbs
BT30-BC075-0295-B	0.7500	1.73	2.95	2.72	1.62	ASC-12-30	TWSQ050-S45	120 ft/lbs
BT30-BCM12-0268-B	12mm	1.38	2.68	2.36	1.38	ASC-12-30	TWSQ050-S38	100 ft/lbs
BT30-BCM16-0268-B	16mm	1.50	2.68	2.36	1.38	ASC-12-30	TWSQ050-S38	100 ft/lbs
BT30-BCM20-0295-B	20mm	1.73	2.95	2.72	1.62	ASC-12-30	TWSQ050-S45	120 ft/lbs

Dual Contact Spindle Part Number	A Bore	D	L1 Projection	L2 Tool Enters	Coolant Seal Depth (Min. Shank Length)	Optional Preset Screw	Optional Torque Wrench Head	Grease & Torque
BT40-BC050-0284-B	0.5000	1.38	2.84	2.36	1.38	ASC-12-30	TWSQ050-S38	100 ft/lbs
BT40-BC062-0287-B	0.6250	1.50	2.87	2.36	1.38	ASC-12-30	TWSQ050-S38	120 ft/lbs
BT40-BC075-0315-B	0.7500	1.73	3.15	2.72	1.62	ASC-12-30	TWSQ050-S45	120 ft/lbs
BT40-BC100-0331-B	1.0000	2.12	3.31	3.00	1.65	ASC-12-30	TWSQ050-S55	140 ft/lbs
BT40-BC125-0401-B	1.2500	2.56	4.01	3.00	2.05	ASC-12-30	TWSQ050-S65	140 ft/lbs

CAT40 & CAT40 Bearing-less Mill Chucks

Features

- 5 µm - 0.0002" Runout @ 2 x Cutter Shank Dia.
- Works in both Standard and Dual Contact Spindles
- Designed for Tool Shanks w/ ISO h6 Class Tolerance
- Tapers are ground better than AT3 for optimal T.I.R.
- Sealed by Design for High Pressure Coolant
- Balanced for use @ 20,000 RPM

Optional (Order Separately):

- Torque Wrench
- Nylon Screw Seal for short tool shanks
- DIN-B Flange Coolant
- Jet-Blast Coolant Ports (for Solid Tooling)
- Fine Trim Balance
  (Sample cutter required for balance compensation)
- For Non-Pull Out add –NP to the part number

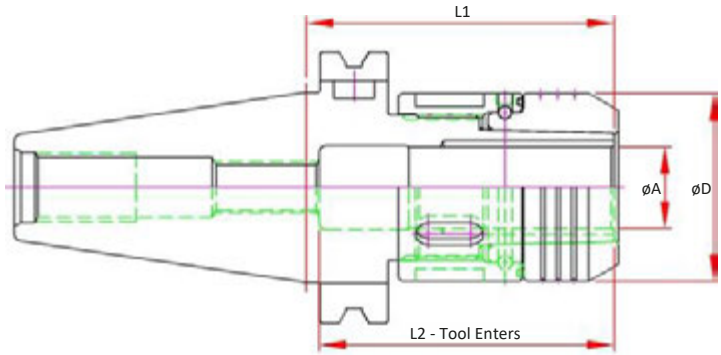

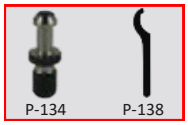

Note: BC Holders do "work in". Meaning the first couple of uses will require additional tightening torque.

Dual Contact Spindle Part Number	Standard Spindle Part Number	A Bore	D	L1 Projection	L2 Tool Enters	Coolant Seal Depth (Min. Shank Length)	Optional Preset Screw	Optional Torque Wrench Head	Grease & Torque
CAT40-BC037-0256-B		0.3750	1.38	2.56	2.36	1.38	ASC-12-30	TWSQ050-S38	100 ft/lbs
CAT40-BC050-0256-B	CAT40-BC050-0256	0.5000	1.38	2.56	2.36	1.38	ASC-12-30	TWSQ050-S38	100 ft/lbs
	CAT40-BC050-0400	0.5000	1.38	4.00	2.36	1.38	ASC-12-30	TWSQ050-S38	100 ft/lbs
CAT40-BC062-0256-B	CAT40-BC062-0256	0.6250	1.50	2.56	2.36	1.38	ASC-12-30	TWSQ050-S38	120 ft/lbs
CAT40-BC075-0283-B	CAT40-BC075-0283	0.7500	1.73	2.83	2.72	1.62	ASC-12-30	TWSQ050-S45	120 ft/lbs
CAT40-BC100-0300-B	CAT40-BC100-0300	1.0000	2.12	3.00	3.00	1.65	ASC-12-30	TWSQ050-S55	140 ft/lbs
CAT40-BC125-0350 -B*	**CAT40-BC125-0350 ***	1.2500	2.56	3.50	3.00	2.05	ASC-12-30	TWSQ050-S65	140 ft/lbs
CAT40-BCM12-0256-B		12mm	1.38	2.56	2.36	1.38	ASC-12-30	TWSQ050-S38	100 ft/lbs
CAT40-BCM16-0256-B		16mm	1.50	2.56	2.36	1.38	ASC-12-30	TWSQ050-S38	120 ft/lbs
CAT40-BCM20-0283-B		20mm	1.73	2.83	2.72	1.62	ASC-12-30	TWSQ050-S45	120 ft/lbs
CAT40-BCM25-0300-B		25mm	2.12	3.00	3.00	1.65	ASC-12-30	TWSQ050-S55	140 ft/lbs
CAT40-BCM32-0350 -B*		32mm	2.56	3.50	3.00	2.05	ASC-12-30	TWSQ050-S65	140 ft/lbs

* No ANSI Safety Area - will not function in umbrella style tool changers

CAT50 & CAT50 Bearing-less Mill Chucks

Features

- 5 µm - 0.0002" Runout @ 2 x Cutter Shank Dia.
- Works in both Standard and Dual Contact Spindles
- Designed for Tool Shanks w/ ISO h6 Class Tolerance
- Tapers are ground better than AT3 for optimal T.I.R.
- Sealed by Design for High Pressure Coolant
- Balanced for use @ 20,000 RPM

Optional (Order Separately):

- Torque Wrench
- Nylon Screw Seal for short tool shanks
- DIN-B Flange Coolant
- Jet-Blast Coolant Ports (for Solid Tooling)
- Fine Trim Balance
  (Sample cutter required for balance compensation)
- For Non-Pull Out add –NP to the part number

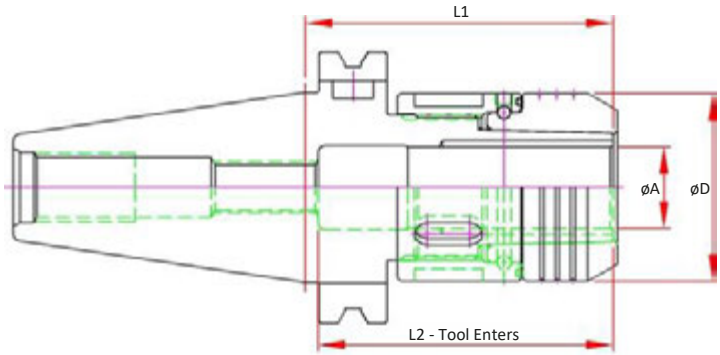

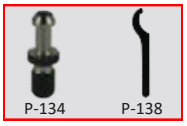

Note: BC Holders do "work in". Meaning the first couple of uses will require additional tightening torque.

Dual Contact Spindle Part Number	Standard Spindle Part Number	A Bore	D	L1 Projection	L2 Tool Enters	Coolant Seal Depth (Min. Shank Length)	Optional Preset Screw	Optional Torque Wrench Head	Grease & Torque
CAT50-BC050-0256-B	CAT50-BC050-0256	0.5000	1.38	2.56	2.36	1.38	ASC-12-30	TWSQ050-S38	100 ft/lbs
CAT50-BC062-0256-B	CAT50-BC062-0256	0.6250	1.50	2.56	2.36	1.38	ASC-12-30	TWSQ050-S38	120 ft/lbs
CAT50-BC075-0283-B	CAT50-BC075-0283	0.7500	1.73	2.83	2.72	1.62	ASC-12-30	TWSQ050-S45	120 ft/lbs
CAT50-BC100-0300-B	CAT50-BC100-0300	1.0000	2.12	3.00	3.00	1.65	ASC-12-30	TWSQ050-S55	140 ft/lbs
CAT50-BC100-0600-B		1.0000	2.12	6.00	3.00	1.65	ASC-12-30	TWSQ050-S55	140 ft/lbs
CAT50-BC125-0350-B	CAT50-BC125-0350	1.2500	2.56	3.50	3.00	2.05	ASC-12-30	TWSQ050-S65	140 ft/lbs
	CAT50-BC200-0450	2.0000	3.78	4.50	3.54	2.20	-	TWSQ075-S96	150 ft/lbs
CAT50-BCM12-0256-B		12mm	1.38	2.56	2.36	1.38	ASC-12-30	TWSQ050-S38	100 ft/lbs
CAT50-BCM16-0256-B		16mm	1.50	2.56	2.36	1.38	ASC-12-30	TWSQ050-S38	120 ft/lbs
CAT50-BCM20-0283-B		20mm	1.73	2.83	2.72	1.62	ASC-12-30	TWSQ050-S45	120 ft/lbs
CAT50-BCM25-0300-B		25mm	2.12	3.00	3.00	1.65	ASC-12-30	TWSQ050-S55	140 ft/lbs
CAT50-BCM32-0350-B		32mm	2.56	3.50	3.00	2.05	ASC-12-30	TWSQ050-S65	140 ft/lbs

HSK063A Bearing-less Mill Chucks

Features

- 5 µm - 0.0002" Runout @ 2" out
- Designed for Tool Shanks w/ ISO h6 Class Tolerance
- Sealed by Design for High Pressure Coolant
- Balanced for use @ 20,000 RPM

Optional (Order Separately):

- Torque Wrench
- Nylon Screw Seal for short tool shanks
- Jet-Blast Coolant Ports (for Solid Tooling)
- Finer Balance
  (Sample cutter required for balance compensation)
- For Non-Pull Out add –NP to the part number

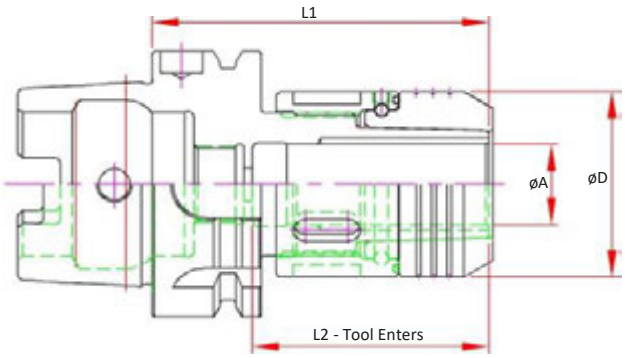

Note: BC Holders do "work in". Meaning the first couple of uses will require additional tightening torque.

HSK063 A/C Spindle Part Number	Non Pull Out Optional	A Bore	B Max. Tool Enters	D	L Projection	Coolant Seal Depth (Min. Shank Length)	Optional Preset Screw	Optional Torque Wrench Head	Grease & Torque
HSK063A-BC050-0362	-NP	0.5000	2.36	1.38	3.62	1.38	ASC-08-24	TWSQ050-S38	100 ft/lbs
HSK063A-BC062-0362	-NP	0.6250	2.36	1.50	3.62	1.38	ASC-08-24	TWSQ050-S38	120 ft/lbs
HSK063A-BC075-0311	Not Available	0.7500	2.16	1.73	3.11	1.62	-	TWSQ050-S45	120 ft/lbs
HSK063A-BC075-0394	-NP	0.7500	2.16	1.73	3.94	1.62	ASC-08-24	TWSQ050-S45	120 ft/lbs
HSK063A-BC100-0394	-NP	1.0000	2.96	2.12	3.94	1.65	ASC-08-24	TWSQ050-S55	140 ft/lbs
HSK063A-BC125-0394	Not Available	1.2500	3.00	2.56	3.94	2.05	-	TWSQ050-S65	140 ft/lbs
HSK063A-BC125-0472	-NP	1.2500	3.00	2.56	4.72	2.05	ASC-08-24	TWSQ050-S65	140 ft/lbs

HSK100A Bearingless Mill Chucks

Features

- 5 µm - 0.0002" Runout @ 2" out
- Designed for Tool Shanks w/ ISO h6 Class Tolerance
- Sealed by Design for High Pressure Coolant
- Balanced for use @ 20,000 RPM

Optional (Order Separately):

- Torque Wrench
- Nylon Screw Seal for short tool shanks
- Jet-Blast Coolant Ports for Solid Tooling
- Finer Balance
  (Sample cutter required for balance compensation)
- For Non-Pull Out add –NP to the part number

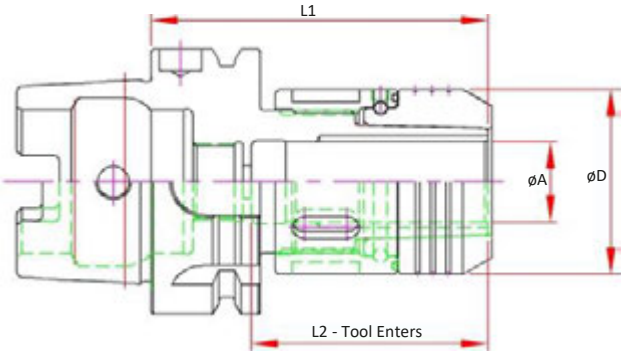

Note: BC Holders do "work in". Meaning the first couple of uses will require additional tightening torque.

HSK 100 A/C Spindle Part Number	Non Pull Out Optional	A Bore	B Max. Tool Enters	D	L Projection	Coolant Seal Depth (Min. Shank Length)	Optional Preset Screw	Optional Torque Wrench Head	Grease & Torque
HSK100A-BC050-0392	-NP	0.5000	2.36	1.38	3.94	1.38	ASC-12-30	TWSQ050-S38	100 ft/lbs
HSK100A-BC062-0392	-NP	0.6250	2.36	1.50	3.94	1.38	ASC-12-30	TWSQ050-S38	120 ft/lbs
HSK100A-BC075-0394	Not Available	0.7500	2.16	1.73	3.11	1.62	-	TWSQ050-S45	120 ft/lbs
HSK100A-BC075-0472	-NP	0.7500	2.16	1.73	4.72	1.62	ASC-12-30	TWSQ050-S45	120 ft/lbs
HSK100A-BC100-0394	Not Available	1.0000	2.96	2.12	3.94	1.65	-	TWSQ050-S55	140 ft/lbs
HSK100A-BC100-0472	-NP	1.0000	2.96	2.12	4.72	1.65	ASC-12-30	TWSQ050-S55	140 ft/lbs
HSK100A-BC125-0512	-NP	1.2500	3.00	2.56	5.12	2.05	-	TWSQ050-S65	140 ft/lbs

BC Setup and Tightening Information

Remove the lock nut from the BC holder assembly, wipe off any dirt or existing grease from taper and inside the lock nut.

Apply grease to taper.

Re-Assemble lock nut.

Body protruding approx. 1mm (0.040) from the lock nut at full torque.

Tighten lock nut until it stops or approx. 1mm (0.040") of the chuck body protrudes out from the face of the lock nut with a torque wrench set to specified settings, see chart.

BC Replacement Nuts

Holder Size	Nut
BC050	NUT BC050
BC062	NUT BC062
BC075 / BCM20	NUT BC075
BC100 / BCM25	NUT BC100
BC125 / BCM32	NUT BC125

Non-Pull Out Replacement Parts

Holder Size	Dowel Pin	Preset Screw
BC050	DP03X08	SCW-ASC-12-30
BC062	DP03X10	
BC075 / BCM20	DP03X12	
BC100 / BCM25	DP03X16	
BC125 / BCM32	DP03X20	

Weldon Flat Information

Industry standard Weldon Flat Information. Non-Pull Out Pin location can be set to match your cutter if different from information provided below.

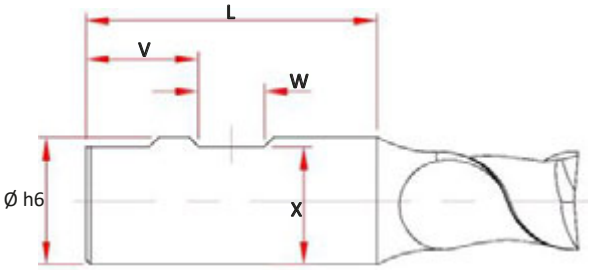

	Shank		L	V	W		X	
	Max Ø	Min Ø (ISO h6)			Min	Max	Max	Min
Inch	0.3750	0.3746	1.563	0.641	0.125	0.282	0.333	0.325
	0.5000	0.4996	1.781	0.616	0.125	0.332	0.458	0.440
	0.6250	0.6246	1.906	0.581	0.125	0.402	0.583	0.560
	0.7500	0.7495	2.031	0.554	0.125	0.457	0.695	0.675
	0.8750	0.8745	2.031	0.554	0.125	0.457	0.820	0.810
	1.0000	0.9995	2.281	0.524	0.125	0.517	0.945	0.925
	1.2500	1.2494	2.281	0.524	0.125	0.517	1.176	1.156
	1.5000	1.4994	2.688	0.524	0.125	0.517	1.426	1.406
	2.0000	1.9993	3.250	0.431	0.125	0.702	1.920	1.900
Metric	16.000	15.989	48	19.0	10.0	10.2	14.2	13.8
	20.000	19.987	50	19.5	11.0	11.2	18.2	17.8
	25.000	24.987	56	26.0	12.0	12.2	23.0	22.6
	32.000	31.984	60	29.0	14.0	14.2	30.0	29.6

MX & VX 3 Micron Chuck

Clamping Range : 0.125” - 0.500”
ISO h6 Tool Shanks Required

Simply the Best Finish & Tool Life in a Cost Effective Milling System

Hands Down Winner in any Finish Milling Application!

Designed for Finish Milling

Once you pre-load the collet into the VX holder, repeat-ability is less than 0.0001” Tool to Tool due to the cross pin design which prevents twisting on the collet while tightening.

Reduced Harmonic Design

Unlike materials, taper nose and draw bar design provide superior vibration dampening over Slim Nose Shrink holders and extensions.

Compact Design

The MX and VX system are compact to provide maximum nose clearance for hard to reach applications.

We have redesigned the nose ends for additional clearance:

VX06 = 0.500 (Previously 0.625)
VX08 = 0.787 (Previously 0.870)
VX12 = 1.000 (Previously 1.180)

When you “have to” use Extensions

No one wants to use extensions but when you have to, use an extension that has the Best TIR in the industry.

Guaranteed 3µm @ 4D, no extension runs better.
Coolant Thru for High Pressure with a Jet-Blast option for solid tools.

Unbeatable T.I.R. - 3µm @ 4D or better!

Collet TIR

Collet Class	Max. TIR
MX	0.00012” @ 4D

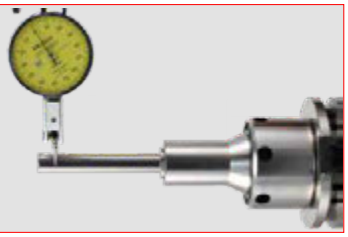

Coolant Thru for High Pressure or Jet-Blast

Collets are sealed by design for high pressure coolant or air. Jet-Blast is available for coolant around solid tools.

How MX Works

Coolant thru center draw bolt accessed from the retention knob end of the holder draws the collet into the pocket and tightens the collet. Please note the retention knob must have a 6mm or larger coolant hole for the 5mm wrench to clear or the knob will have to be removed to change cutting tools.

Design uses a T-Handle Hex wrench to tighten which limits the maximum gripping force, MX is designed for finishing only.

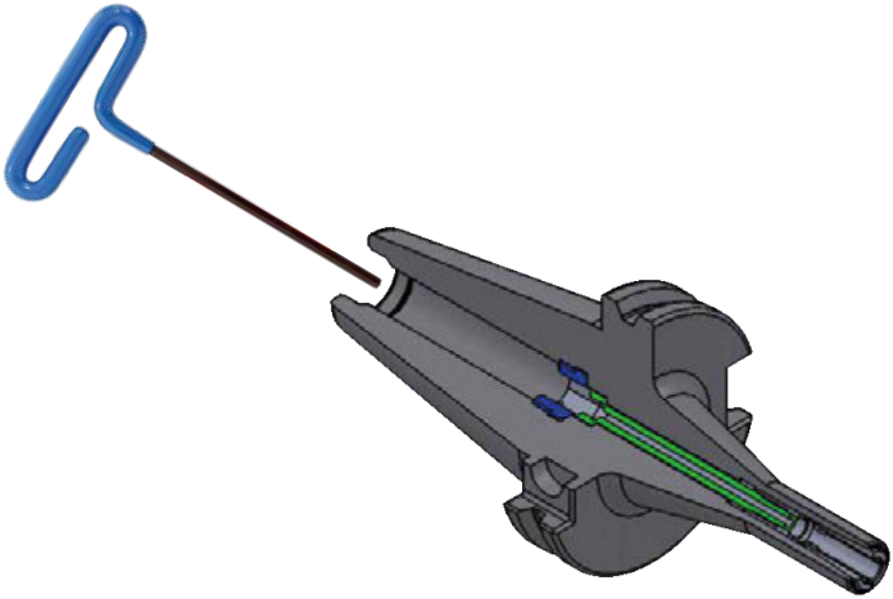

How VX Works

VX is a front locking collar design utilizing a pin spanner wrench to tighten. This allows for increased locking pressure over MX up to 5X the holding power.

The front locking mechanism requires the collet to be threaded into the holder before the collar can be locked.

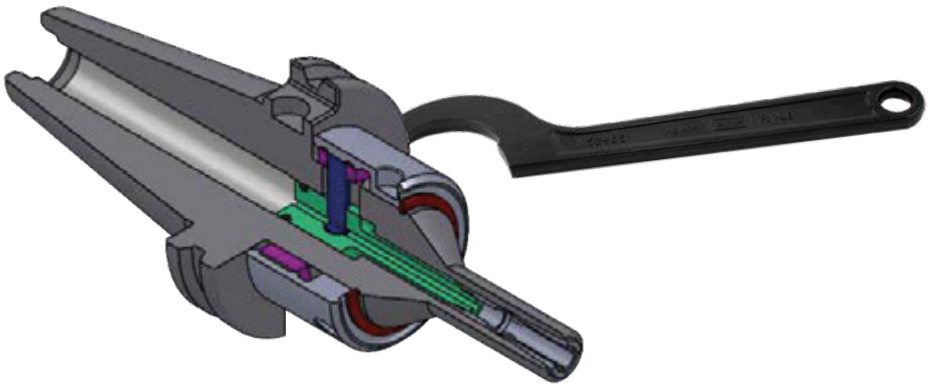

CAT & DCAT VX Mini Chuck

Features

- **3 µm - 0.0001" Runout @ 4X Diameter**
- Front Locking System
- Coolant Thru
- Dynamically Pre-Balanced G2.5 @ 25,000 RPM or < 1gmm
- Tapers are ground better than AT3 for optimal T.I.R.

Optional (Order Separately):

- Wrench
- Torque Wrench
- Collets, STD and Jet-Blast
- DIN-B Flange Coolant
- Fine Trim Balance (Sample cutter required for balance compensation)

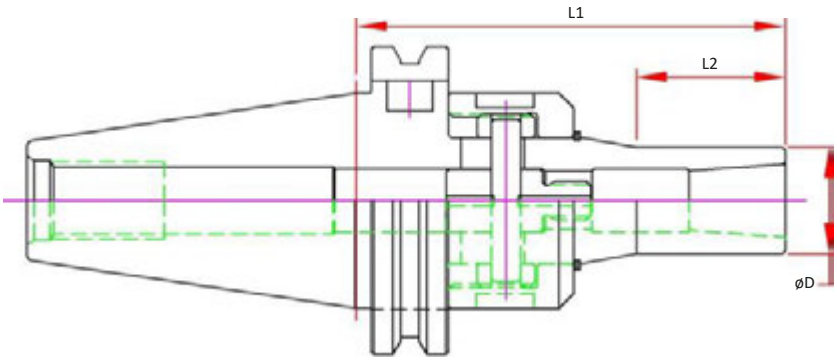

	Dual Contact Spindle Part Number	Standard Spindle Part Number	Collet Range	D	L1 Projection	L2	Collet	Wrench	Locking Torque Max.
CAT40	CAT40-VX06-0394-B	CAT40-VX06-0394	0.079 - 0.250	0.50	3.94	1.48	MX06	45-48 PIN	30 ft/lbs
	CAT40-VX06-0591-B	CAT40-VX06-0591			5.91				
	CAT40-VX08-0350-B	CAT40-VX08-0350	0.125 - 0.394	0.787	3.50	1.21	MX08		
	CAT40-VX08-0591-B	CAT40-VX08-0591			5.91				
	CAT40-VX12-0394-B	CAT40-VX12-0394	0.157 - 0.500	1.00	3.94	2.03	MX12		
	CAT40-VX12-0591-B	CAT40-VX12-0591			5.91				
CAT50	CAT50-VX08-0413-B	CAT50-VX08-0413	0.125 - 0.394	0.787	4.13	1.21	MX08		
	CAT50-VX08-0654-B	CAT50-VX08-0654			6.54				
	CAT50-VX12-0457-B	CAT50-VX12-0457	0.157 - 0.500	1.00	4.57	2.03	MX12		
	CAT50-VX12-0654-B	CAT50-VX12-0654			6.54				

Dual Contact DBT VX Mini Chuck

Features

- **3 µm - 0.0001" Runout @ 4X Diameter**
- Front Locking System
- Coolant Thru
- Dynamically Pre-Balanced G2.5 @ 25,000 RPM or < 1gmm
- Tapers are ground better than AT3 for optimal T.I.R.

Optional (Order Separately):

- Wrench
- Torque Wrench
- Collets
- DIN-B Flange Coolant
- Fine Trim Balance (Sample cutter required for balance compensation)

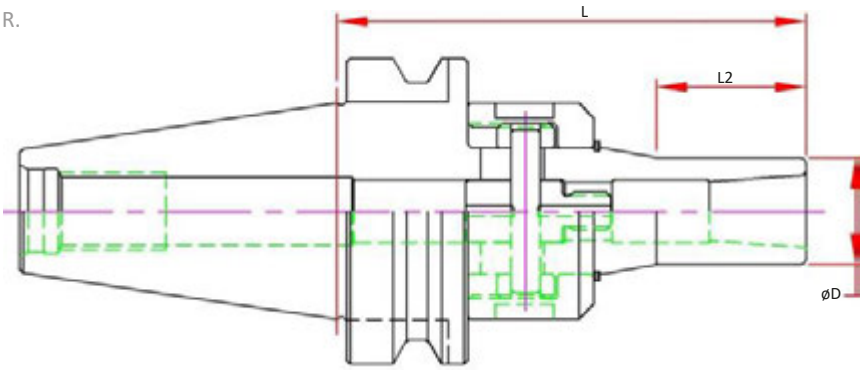

	Dual Contact Spindle Part Number	Collet Range	D	L1 Projection	L2	Collet	Wrench	Locking Torque Max.
BT30	BT30-VX06-090-B	0.079 - 0.250	0.50	3.54	1.37	MX06	45-48 PIN	30 ft/lbs
	BT30-VX08-092-B	0.125 - 0.394	0.787	3.62	1.21	MX08		
BT40	BT40-VX06-100-B	0.079 - 0.250	0.50	3.94	1.48	MX06		
	BT40-VX06-150-B			5.91				
	BT40-VX08-100-B	0.125 - 0.394	0.787	3.94	1.21	MX08		
	BT40-VX08-150-B			5.91				
	BT40-VX12-110-B	0.157 - 0.500	1.00	4.33	2.03	MX12		
	BT40-VX12-150-B			5.91				

HSK VX Mini Chuck+

Features

- **3 µm - 0.0001" Runout @ 4X Diameter**
- Front Locking System
- Coolant Thru
- Dynamically Pre-Balanced G2.5 @ 25,000 RPM or < 1gmm

Optional (Order Separately):

- Wrench
- Torque Wrench
- Collets, STD and Jet-Blast
- Fine Trim Balance (Sample cutter required for balance compensation)

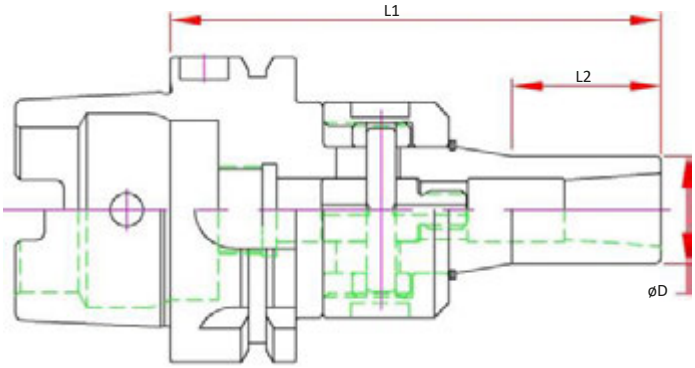

	Part Number	Collet Range	D	L1 Projection	L2	Collet	Wrench	Locking Torque Max.
HSK63A	HSK063A-VX06-105	0.079 - 0.250	0.500	4.13	1.48	MX06	45-48 PIN	30 ft/lbs
	HSK063A-VX06-150			5.91				
	HSK063A-VX08-105	0.125 - 0.394	0.787	4.13	1.21	MX08		
	HSK063A-VX08-150			5.91				
	HSK063A-VX12-115	0.157 - 0.500	1.000	4.53	2.03	MX12		
	HSK063A-VX12-150			5.91				
HSK100A	HSK100A-VX06-110	0.079 - 0.250	0.500	4.33	1.48	MX06		
	HSK100A-VX06-150			5.91				
	HSK100A-VX08-110	0.125 - 0.394	0.787	4.33	1.21	MX08		
	HSK100A-VX08-150			5.91				
	HSK100A-VX12-120	0.157 - 0.500	1.000	4.53	2.03	MX12		
	HSK100A-VX12-165			6.49				

VX Assembly & Tightening Instructions

The instructions below are a basic procedure. Always use proper safety equipment when working with any machine tool component.

Turn locking collar counter-clockwise until it stops.

Insert collet and turn clockwise.

Use Flat Screw Driver if required.

Turn collet until it stops or reaches 1/8” from the face of the chuck. Assemble loose, ***Do not tighten!*** Thread gap is required for proper function.

Insert cutter, while holding the cutter hand tighten the locking collar clockwise until the collet holds the tool.

Tighten locking collar to 30 ft/lbs Maximum
Do not over tighten or tool can jam or cause excessive TIR!

Dual Contact DCAT MX - Mini Chuck

Features

- **3 µm - 0.0001" Runout @ 4X Diameter**
- Rear Draw Bolt Locking System
- Coolant Thru
- Dynamically Pre-Balanced G2.5 @ 25,000 RPM or < 1gmm
- Tapers are ground better than AT3 for optimal T.I.R.

Optional (Order Separately):

- Wrench
- Torque Wrench
- Collets, STD and Jet-Blast
- DIN-B Flange Coolant
- Fine Trim Balance (Sample cutter required for balance compensation)

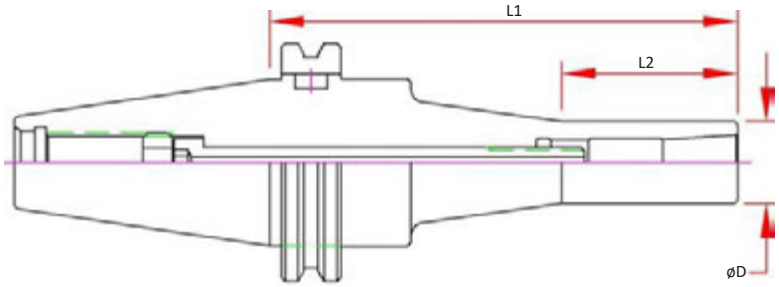

	Dual Contact Spindle Part Number	Standard Spindle Part Number	Collet Range	D	L1 Projection	L2	Collet	Wrench	Locking Torque Max.
CAT40	CAT40-MX06-085-B	CAT40-MX06-085	0.079 - 0.250	0.50	3.35	1.42	MX06	MXW05	20 ft/lbs
	CAT40-MX06-150-B	CAT40-MX06-150			5.91				
	CAT40-MX08-085-B	CAT40-MX08-085	0.125 - 0.394	0.787	3.35	1.42	MX08		
	CAT40-MX08-120-B	CAT40-MX08-120			4.72				
	CAT40-MX08-150-B	CAT40-MX08-150			5.91				
	CAT40-MX12-090-B	CAT40-MX12-090	0.157 - 0.500	1.00	3.54	1.38	MX12		
	CAT40-MX12-120-B	CAT40-MX12-120			4.72				
CAT50	CAT50-MX08-110-B	CAT50-MX08-110	0.125 - 0.394	0.787	4.33	1.42	MX08		
	CAT50-MX08-165-B	CAT50-MX08-165			6.50				
	CAT50-MX12-105-B	CAT50-MX12-105	0.157 - 0.500	1.00	4.13	1.38	MX12		
	CAT50-MX12-165-B	CAT50-MX12-165			6.50				

Dual Contact DBT MX - Mini Chuck

Features

- **3 µm - 0.0001" Runout @ 4X Diameter**
- Rear Draw Bolt Locking System
- Coolant Thru
- Dynamically Pre-Balanced G2.5 @ 25,000 RPM or < 1gmm
- Tapers are ground better than AT3 for optimal T.I.R.

Optional (Order Separately):

- Wrench
- Torque Wrench
- Collets, STD and Jet-Blast
- DIN-B Flange Coolant
- Fine Trim Balance (Sample cutter required for balance compensation)

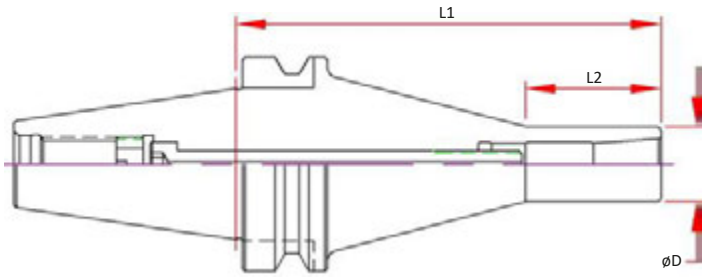

	Dual Contact Spindle Part Number	Standard Spindle Part Number	Collet Range	D	L1 Projection	L2	Collet	Wrench	Locking Torque Max.
BT30	BT30-MX06-090-B	BT30-MX06-090	0.079 - 0.250	0.500	3.54	1.42	MX06	MXW05	20 ft/lbs
	BT30-MX08-090-B	BT30-MX08-090	0.125 - 0.394	0.787	3.54	1.42	MX08		
	BT30-MX12-105-B	BT30-MX12-105	0.157 - 0.500	1.000	4.13	1.38	MX12		
BT40	BT40-MX06-085-B		0.079 - 0.250	0.500	3.35	1.42	MX06		
	BT40-MX06-150-B				5.91				
	BT40-MX08-085-B		0.125 - 0.394	0.787	3.35	1.42	MX08		
	BT40-MX12-090-B		0.157 - 0.500	1.000	3.54	1.38	MX12		

HSK MX - Mini Chuck

Features

- **3 µm - 0.0001" Runout @ 4X Diameter**
- Rear Draw Bolt Locking System
- Coolant Thru
- Dynamically Pre-Balanced G2.5 @ 25,000 RPM or < 1gmm

Optional (Order Separately):

- Wrench
- Torque Wrench
- Collets, STD and Jet-Blast
- Fine Trim Balance
  (Sample cutter required for balance compensation)

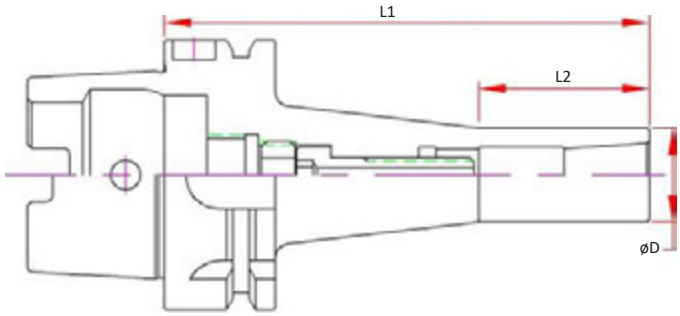

Part Number	Collet Range	D	L1 Projection	L2	Collet	Wrench	Locking Torque Max.
HSK063A-MX06-100	0.079 - 0.250	0.500	3.94	1.42	MX06	MXW05	20 ft/lbs
HSK063A-MX08-100	0.125 - 0.394	0.787	3.94	1.42	MX08		
HSK063A-MX12-110	0.157 - 0.500	1.000	4.33	1.54	MX12		

MX Straight Shank Extensions

Features

- **3 µm - 0.0001" Runout @ 4X Diameter**
- Rear Draw Bolt Locking System
- Coolant Thru

Optional (Order Separately):

- Wrench
- Torque Wrench
- Collets, STD and Jet-Blast

Part Number	Collet Range	D	L	Collet	Wrench	Locking Torque Max.
S050-MX06-0400	0.079 - 0.250	0.5000	4.00	MX06	MXW05	20 ft/lbs
S050-MX06-0600			6.00			
S075-MX08-0600	0.125 - 0.394	0.7500	6.00	MX08		
S100-MX12-0600	0.157 - 0.500	1.0000	6.00	MX12		

MX - Mini Chuck Replacement Parts

- Select replacement Locking Bolt by Holder #
- Replacement Locking Bolts are coolant thru
- * –FM series is front mounting, requires special assembly tool

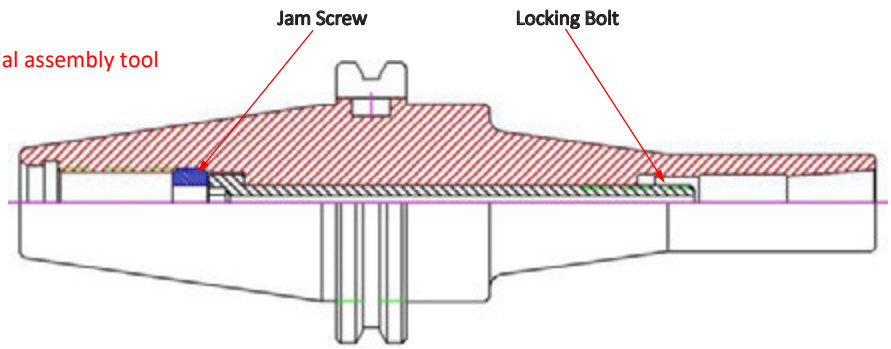

Holder #	Locking Bolt #	Bolt Hex	Jam Screw #
BT30-MX06-090	MX/MXCS M06X056C HEX5	5mm	JAM-NUT BT30
BT30-MX08-090	MX/MXCS M08X060-10.0 HEX5	5mm	JAM-NUT BT30
BT30-MX12-105	MX/MXCS M10X025-13.0 HEX5	5mm	JAM-NUT BT30-FM*
BT40-MX06-085	MX/MXCS M06X056C HEX5	5mm	JAM-NUT BT40
BT40-MX06-150	MX/MXCS M06X091C HEX5	5mm	JAM-NUT BT40X60
BT40-MX08-085	MX/MXCS M08X060-13.0 HEX5	5mm	JAM-NUT BT40
BT40-MX08-120	MX/MXCS M08X090-13.0 HEX5	5mm	JAM-NUT BT40
BT40-MX08-150	MX/MXCS M08X120-13.0 HEX5	5mm	JAM-NUT BT40
BT40-MX12-090	MX/MXCS M10X060-13.0 HEX5	5mm	JAM-NUT BT40
BT40-MX12-120	MX/MXCS M10X090-13.0 HEX5	5mm	JAM-NUT BT40
CAT40-MX06-085	MX/MXCS M06X056C HEX5	5mm	JAM-NUT CAT40
CAT40-MX06-120	MX/MXCS M06X091C HEX5	5mm	JAM-NUT CAT40X30
CAT40-MX06-150	MX/MXCS M06X091C HEX5	5mm	JAM-NUT CAT40X60
CAT40-MX08-085	MX/MXCS M08X060-13.0 HEX5	5mm	JAM-NUT CAT40
CAT40-MX08-120	MX/MXCS M08X090-13.0 HEX5	5mm	JAM-NUT CAT40
CAT40-MX08-150 N	MX/MXCS M08X124-13.0 HEX5	5mm	JAM-NUT CAT40
CAT40-MX08-150 P	MX/MXCS M08X124-13.0 HEX5	5mm	JAM-NUT CAT40
CAT40-MX12-090	MX/MXCS M10X060-13.0 HEX5	5mm	JAM-NUT CAT40
CAT40-MX12-120	MX/MXCS M10X090-13.0 HEX5	5mm	JAM-NUT CAT40
CAT50-MX08-110	MX/MXCS M08X090-13.0 HEX5	5mm	JAM-NUT CAT50
CAT50-MX08-165	MX/MXCS M08X120-13.0 HEX5	5mm	JAM-NUT CAT50
CAT50-MX08-225 D	MX/MXCS M08X120-13.0 HEX5	5mm	JAM-NUT CAT50
CAT50-MX08-225 P	MX/MXCS M08X190-13.0 HEX5	5mm	JAM-NUT CAT50
CAT50-MX12-105	MX/MXCS M10X090-13.0 HEX5	5mm	JAM-NUT CAT50
CAT50-MX12-120	MX/MXCS M10X120-13.0 HEX5	5mm	JAM-NUT CAT50
CAT50-MX12-165 D	MX/MXCS M10X120-13.0 HEX5	5mm	JAM-NUT CAT50
CAT50-MX12-165 P	MX/MXCS M10X090-13.0 HEX5	5mm	JAM-NUT CAT50
HSK63A-MX06-100	MX/MXCS M06X035C HEX5	5mm	JAM-NUT BT40
HSK63A-MX08-100	MX/MXCS M08X020-13.0 HEX5	5mm	JAM-NUT BT40
HSK63A-MX12-110	MX/MXCS M10X025-13.0 HEX5	5mm	JAM-NUT BT40
S050-MX06-0400	MX/MXCS M06X064C HEX5	5mm	JAM-NUT S050
S050-MX06-0600	MX/MXCS M06X115C HEX5	5mm	JAM-NUT S050
S075-MX08-0600	MX/MXCS M08X090-10.0 HEX5	5mm	JAM-NUT BT30
S075-MX08-0800	MX/MXCS M08X120-10.0 HEX5	5mm	JAM-NUT BT30
S075-MX08-1000	MX/MXCS M08X171-10.0 HEX5	5mm	JAM-NUT BT30
S100-MX12-0600	MX/MXCS M10X090-13.0 HEX5	5mm	JAM-NUT BT40
S100-MX12-0800	MX/MXCS M10X120-13.0 HEX5	5mm	JAM-NUT BT40

MX Coolant Collets

Features

- **3µm - 0.0001" Runout @ 4X Diameter**
- Seals up to 1,500 PSI Coolant
- Fits MX & VX Collet Chucks
- On-Size Type "A" Collets for h6 tolerance cutting tools
- Cutting tools must be fully inserted for sealed applications

Optional (Order Separately):

- Jet-Blast Coolant Ports

MX06 Collets

Tool Shank h6		MX06	Tool Shank Enters Depth
1/8	0.1250	MX06-0125	0.81—0.94
5/32	0.1563	MX06-0156	0.83— 0.94
3/16	0.1875	MX06-0187	
7/32	0.2188	MX06-0218	
1/4	0.2500	MX06-0250	0.85—0.94
2.0	0.0787	MX06-M020	0.81—0.94
2.5	0.0984	MX06-M025	
3.0	0.1181	MX06-M030	
3.5	0.1378	MX06-M035	
4.0	0.1575	MX06-M040	0.83— 0.94
4.5	0.1772	MX06-M045	
5.0	0.1969	MX06-M050	
5.5	0.2165	MX06-M055	0.85—0.94
6.0	0.2362	MX06-M060	

MX08 Collets

Tool Shank h6		MX08	Tool Shank Enters Depth
1/8	0.125	MX08-0125	0.75—1.42
5/32	0.1563	MX08-0156	
3/16	0.1875	MX08-0187	0.87—1.42
1/4	0.25	MX08-0250	0.98—1.18
5/16	0.3125	MX08-0312	
3/8	0.375	MX08-0375	1.14—1.18
3.0	0.1181	MX08-M030	0.75—1.42
4.0	0.1575	MX08-M040	0.83—1.42
5.0	0.1969	MX08-M050	0.87—1.42
6.0	0.2362	MX08-M060	0.98—1.42
7.0	0.2756	MX08-M070	1.14—1.18
8.0	0.315	MX08-M080	
9.0	0.3543	MX08-M090	
10.0	0.3937	MX08-M100	

MX12 Collets

Tool Shank h6		MX12	Tool Shank Enters Depth
1/8	0.1250	MX12-0125	0.75—1.61
3/16	0.1875	MX12-0187	0.87—1.61
1/4	0.2500	MX12-0250	1.06—1.61
5/16	0.3125	MX12-0312	1.56—1.61
3/8	0.3750	MX12-0375	1.56—1.65
7/16	0.4375	MX12-0437	
1/2	0.5000	MX12-0500	1.61—1.74
3.0	0.1181	MX12-M030	0.75—1.61
4.0	0.1575	MX12-M040	0.83—1.61
5.0	0.1969	MX12-M050	0.95—1.61
6.0	0.2362	MX12-M060	1.06—1.61
8.0	0.3150	MX12-M080	1.56—1.61
10.0	0.3937	MX12-M100	1.56—1.65
12.0	0.4724	MX12-M120	

MX Jet-Blast Collets

Features

- 3µm - 0.0001" Runout @ 4X Diameter
- Jet-Blast for Coolant Around Solid Tools
- Fits MX & VX Collet Chucks
- Designed for h6 tolerance cutting tools
- Coolant ports are 2 ports
  Additional holes can be added as an up charge
- To Order, add –J to the end of the MX Collet number

1/2 Moon Jet-Blast, only used when collet wall is too thin for full diameter Jet-Blast holes.

MX Collet Sets

Features

- 3 µm - 0.0001" or Better
- Includes Collet Tray
  Note: Collet Tray includes positions for Inch and Metric collets, will not be filled unless all sizes are ordered

Part Number	Collet Size	Pieces	Includes
MX06-MSET-7	MX06	7	3.0, 3.5, 4.0, 4.5, 5.0, 5.5, 6.0
MX06-ISET-5	MX06	5	1/8, 5/32, 3/16, 7/32, 1/4
MX08-MSET-8	MX08	8	3.0, 4.0, 5.0, 6.0, 7.0, 8.0, 9.0, 10.0
MX08-ISET-6	MX08	6	1/8, 5/32, 3/16, 1/4, 5/16, 3/8
MX12-MSET-7	MX12	7	3.0, 4.0, 5.0, 6.0, 8.0, 10.0, 12.0
MX12-ISET-7	MX12	7	1/8, 3/16, 1/4, 5/16, 3/8, 7/16, 1/2

MX Collet Trays

Features

- Collet Tray includes positions for Inch and Metric collets.
- Steel Construction with Sizes Laser marked

Part Number	Amount of Collets
MX06 TRAY	14
MX08 TRAY	14
MX12 TRAY	14

SX-P 3 Micron Chuck

Clamping Range : 0.031" - 1.000"

Collet Range : 0.020" (0.5mm)

Ultimate Precision Collet Chuck Designed for Drilling & Finish Milling

For the best tool life and superior finish.

Smaller Nose for Tight Applications

SX holders are designed to provide additional clearance for close wall applications.
The SX25M has been re-designed to provide additional clearance. SX25M provides the same clearance as ER32 but with a tool capacity up to 1".

Holder	Max. Cutting Tool	Nose Ø
SX06	0.250" (6mm)	0.77"
SX06M	0.250" (6mm)	0.63"
SX10	0.375" (10mm)	1.08"
SX10M	0.375" (10mm)	0.87"
SX16	0.625" (16mm)	1.58"
SX25M	1.000" (25mm)	1.97"

T.I.R. - 3µm @ 4D, Second to None!

- All SX-P Collets are hand inspected and checked 3 times for guaranteed performance
- Standard 5µm Grade Available
- Inch & Metric Sizes

Collet TIR

Collet Class	Max. TIR
SX	0.00020" @ 4D
SX-P	0.00012" @ 4D

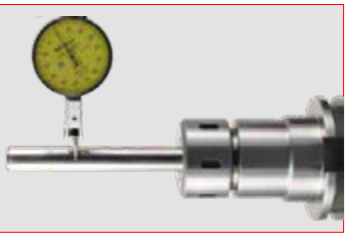

Reduced Harmonic Design

When gage-lines are aligned, SX16 sits deeper in the chuck with less overhang and more shank support than ER32.

The Flat Locking Surface eliminates any influence from the locking nut for consistency on every tool change.

3 Micron Provides Results

Shown below a 1/4" at 10X. Worst Case Runout Shown with each collet at maximum TIR.

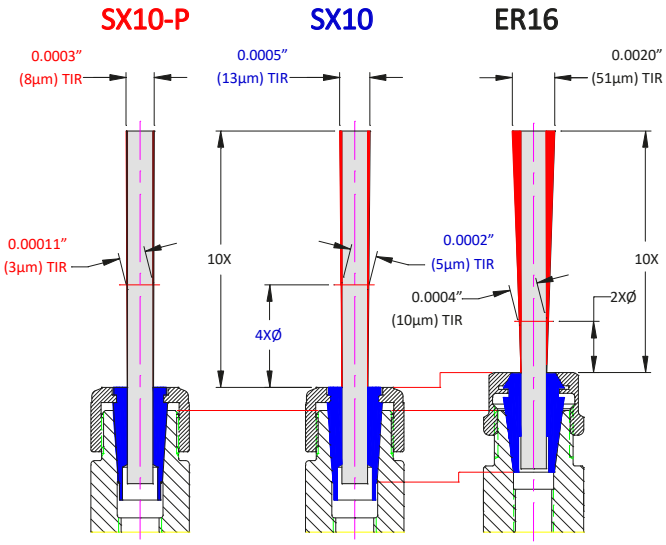

High Pressure Coolant Caps

SX Coolant Caps supply up to 1,000 psi coolant seal. The threaded cap design when properly tightened has no effect on the TIR of the assembly, even at 30D!

Jet-Blast also available for solid cutting tools.

SX25 Non-Pull Out Collets

For Hi-Feed Milling Applications

Non Pull out collets are developed for hi-feed titanium and aluminum applications with a cutter helix of 45° or greater to prevent cutter pull out.

The Pioneer design utilizes a standard hardened 62Rc 3mm dowel pin to provide contact across the flat and superior sheer strength. The preset screw is used to hold the cutter in position, preventing any movement while being locked into the tool holder.

The modification is performed at our location in Chicago, the pin location can be adjusted to fit any flat or groove position within the collet bore behind the nut. Special configurations available upon request.

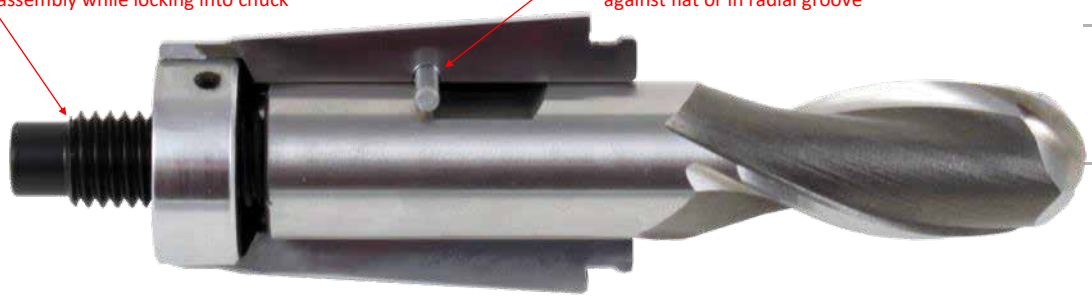

PART NUMBER	BORE
SX25-0375NP	0.3750
SX25-0500NP	0.5000
SX25-0625NP	0.6250
SX25-0750NP	0.7500
SX25-0875NP	0.8750
SX25-M120NP	12MM
SX25-M160NP	16MM
SX25-M200NP	20MM

SX25 Non-Pull Out Assembly - How does it work!

Insert SX25-NP Collet into the SXN25M Nut

Insert cutting tool into the collet, cutter flat orientation to the pin hole as shown

Use safety gloves if required

Fully insert cutter into the collet

Insert Pin into the Pin Hole Note: if cutting tool flat is not in the correct orienta-tion the pin will not insert, rotate cutter if needed to align the pin to the flat

Once the pin is fully inserted pull out on the cutting tool so the back of the flat is tight against the pin

Use safety gloves if required

Insert the preset screw finger tight against the back of the cutting tool to hold the cutter in place and eliminate gap and movement

Assemble into the collet chuck, torque to 85 ft/lbs, you are ready to go!

SX Mini Collet Chuck Extensions

Features

- **3 µm - 0.0001" Runout Taper to Taper**
- Coolant Thru Body

Optional (Order Separately):

- Wrench
- Torque Wrench
- Collets
  - 0.005mm (0.0002") Standard
  - 0.003mm (0.0001") Ultra Precision
  - Sealed (Select Sizes)
  - Jet-Blast (Select Sizes)

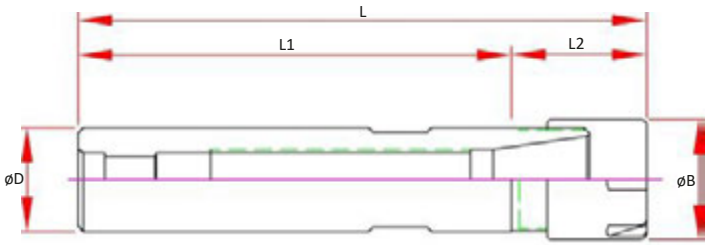

Part Number	Collet Type	B	D	L	L1	L2	Set Screw	Wrench	Nut Type
S050-SX06M-0552	SX06	0.63	0.500	6.58	5.52	1.07	ASC-SX06-SS	ERW-11M	SX-Mini
S075-SX10M-0640	SX10	0.87	0.750	7.87	6.40	1.47	ASC-ER16-SS	ERW-16M	SX-Mini

Dual Contact CAT40 SX Mini Collet Chucks

Features

- **3 µm - 0.0001" Runout Taper to Taper**
- Coolant Thru Body
- Dynamically Pre-Balanced G2.5 @ 25,000 RPM or < 1gmm
- DIN AD/B Flange Coolant Included
  (remove plugs for thru flange coolant)

Optional (Order Separately):

- Wrench
- Torque Wrench
- Collets
  - 0.005mm (0.0002") Standard
  - 0.003mm (0.0001") Ultra Precision
  - Sealed (Select Sizes)
  - Jet-Blast (Select Sizes)
- Fine Trim Balance
  (Sample cutter required for balance compensation)

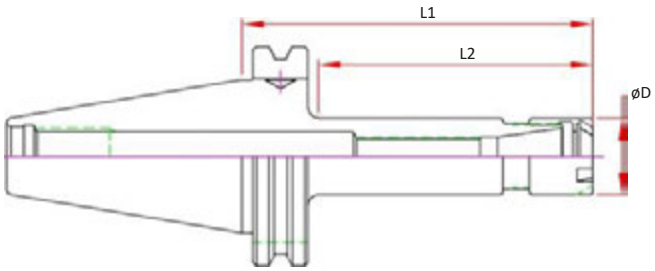

Dual Contact Spindle Part Number	Flange Coolant	D	L1 Projection	L2	Max. Preset	Collet	Nut	Wrench
CAT40-SX06M-0250-B-D	Included	0.63	2.50	1.56	2.12	SX06	SXN-06M	ERW-11M
CAT40-SX06M-0400-B-D			4.00	2.42				
CAT40-SX10M-0250-B-D	Included	0.87	2.50	1.56	2.70	SX10	SXN-10M	ERW-16M
CAT40-SX10M-0400-B-D			4.00	2.42				

CAT40 & CAT40 SX Collet Chucks

Features

- **3 µm - 0.0001" Runout Taper to Taper**
- Coolant Thru Body
- Dynamically Pre-Balanced G2.5 @ 25,000 RPM or <1gmm
- DIN AD/B Flange Coolant Included (Select Models, remove plugs for thru flange coolant)

Optional (Order Separately):

- Wrench
- Torque Wrench
- Collets
  - 0.005mm (0.0002") Standard
  - 0.003mm (0.0001") Ultra Precision
  - Sealed (Select Sizes)
  - Jet-Blast (Select Sizes)
- DIN-B Coolant (Select models)
- Fine Trim Balance (Sample cutter required for balance compensation)

Style - 1

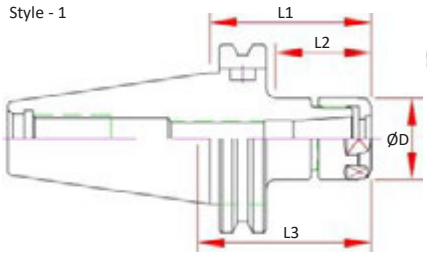

Style - 2

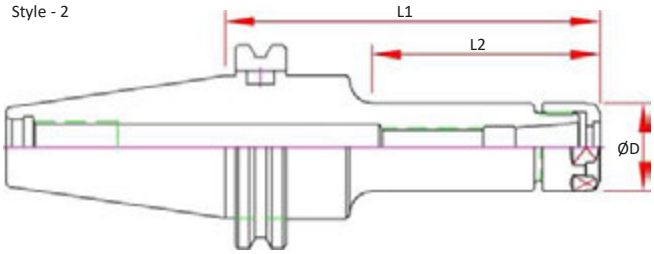

Style - 3

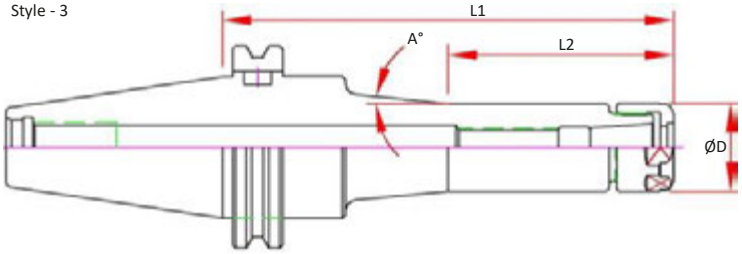

Style - 4

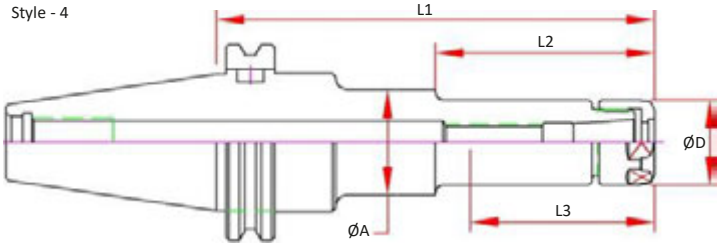

Max Capacity	Dual Contact Spindle Part Number	Standard Spindle Part Number	Style	Flange Coolant	A	B	ØD	L Projection	L2 Max. Preset	Collet	Nut	Wrench
0.250	CAT40-SX06-0250-B-D	CAT40-SX06-0250	1	Included	-	1.63	0.77	2.50	2.16	SX06	SXN-06	SXW-06
	CAT40-SX06-0354-B	CAT40-SX06-0354	2	Optional Add –D	-	1.97		3.54				
	CAT40-SX06-0472-B	CAT40-SX06-0472	4		Ø32	2.36		4.72				
	CAT40-SX06-0591-B	CAT40-SX06-0591	4		Ø32	2.36		5.91				
0.394	CAT40-SX10-0250-B-D	CAT40-SX10-0250	1	Included	-	1.63	1.08	2.50	2.81	SX10	SXN-10	SXW-10
	CAT40-SX10-0354-B	CAT40-SX10-0354	2	Optional Add –D	-	1.97		3.54				
	CAT40-SX10-0472-B	CAT40-SX10-0472	4		Ø32	2.76		4.72				
	CAT40-SX10-0591-B	CAT40-SX10-0591	4		Ø32	2.76		5.91				
	CAT40-SX10-0800-B		3		2.67°	2.76		8.00				
0.630	CAT40-SX16-0250-B-D	CAT40-SX16-0250	1	Included	-	1.63	1.58	2.50	3.12	SX16	SXN-16	SXW-16
	CAT40-SX16-0354-B	CAT40-SX16-0354	2	Optional Add –D	-	2.12		3.54	3.03			
	CAT40-SX16-0472-B	CAT40-SX16-0472	2		-	3.30		4.72	2.95			
	CAT40-SX16-0591-B	CAT40-SX16-0591	2		-	4.48		5.91	2.95			
	CAT40-SX16-0800-B		2		-	5.66		8.00	2.63			
1.000	**CAT40-SX25M-0175-B-D****	**CAT40-SX25M-0175-D****	1	Included	-	1.00	1.97	1.75	3.25	SX25	SXN-25M	50-55 HOOK
	CAT40-SX25M-0250-B-D	CAT40-SX25-0250	1		-	1.75		2.50	2.62			
	CAT40-SX25M-0354-B	CAT40-SX25M-0354	2	Optional Add –D	-	2.79		3.54	3.20			
	CAT40-SX25M-0472-B	CAT40-SX25M-0472	2		-	3.97		4.72	3.68			
	CAT40-SX25M-0591-B	CAT40-SX25M-0591	2		-	5.15		5.91	3.68			
	CAT40-SX25M-0800-B		2		-	7.25		8.00	3.68			

*** Nut Diameter is larger than ANSI B5.50 Safety Area, may not function in Umbrella Style Tool Changers*

CAT50 & CAT50 SX Collet Chucks

Features

- **3 µm - 0.0001" Runout Taper to Taper**
- Coolant Thru Body
- Dynamically Pre-Balanced G2.5 @ 25,000 RPM or <1gmm

Optional (Order Separately):

- Wrench
- Torque Wrench
- Collets
  - 0.005mm (0.0002") Standard
  - 0.003mm (0.0001") Ultra Precision
  - Sealed (Select Sizes)
  - Jet-Blast (Select Sizes)
- DIN-B Coolant
- Fine Trim Balance (Sample cutter required for balance compensation)

Style - 1

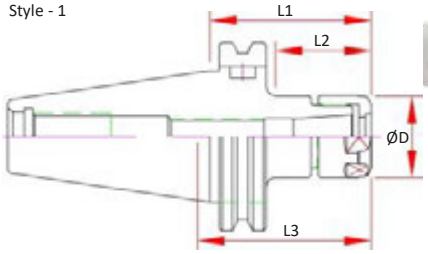

Style - 2

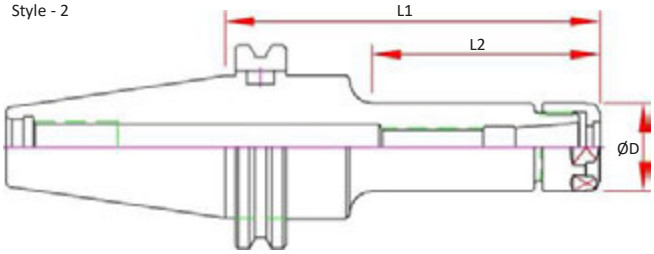

Style - 3

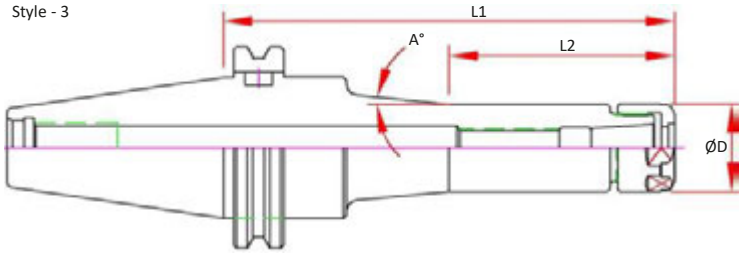

Style - 4

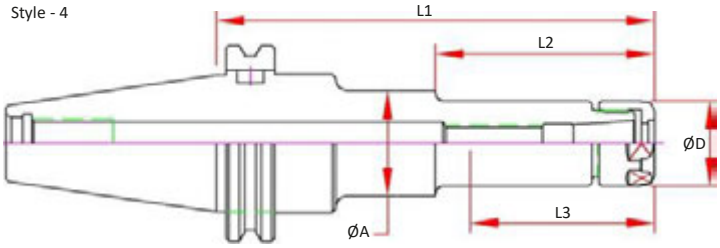

Max Capacity	Dual Contact Spindle Part Number	Standard Spindle Part Number	Style	Flange Coolant	A	B	D	L Projection	L2 Max. Preset	Collet	Nut	Wrench
0.250	CAT50-SX06-0413-B	CAT50-SX06-0413	1	Optional Add –D	-	2.36	0.77	4.13	2.11	SX06	SXN-06	SXW-06
	CAT50-SX06-0531-B	CAT50-SX06-0531	4		Ø32mm			5.31	2.11			
	CAT50-SX06-0650-B	CAT50-SX06-0650	4		Ø32mm			6.50	2.11			
	CAT50-SX06-0800-B		4		Ø30mm			8.00	1.37			
0.394	CAT50-SX10-0413-B	CAT50-SX10-0413	1	Optional Add –D	-	2.36	1.08	4.13	3.05	SX10	SXN-10	SXW-10
	CAT50-SX10-0531-B	CAT50-SX10-0531	4		Ø32mm	2.95		5.31	3.05			
	CAT50-SX10-0650-B	CAT50-SX10-0650	4		Ø32mm	2.95		6.50	2.71			
	CAT50-SX10-0800-B		4		Ø40mm	2.95		8.00	2.71			
0.630	CAT50-SX16-0413-B	CAT50-SX16-0413	1	Optional Add –D	-	2.56	1.58	4.13	3.15	SX16	SXN-16	SXW-16
	CAT50-SX16-0531-B	CAT50-SX16-0531	1		-	3.54		5.31				
	CAT50-SX16-0650-B	CAT50-SX16-0650	3		8.27°	3.54		6.50				
	CAT50-SX16-0800-B		3		3.88°	3.54		8.00				
1.000	CAT50-SX25M-0413-B	CAT50-SX25M-0413	1	Optional Add –D	-	2.56	1.97	4.13	3.87	SX25	SXN-25M	50-55 HOOK
	CAT50-SX25M-0531-B	CAT50-SX25M-0531	1		-	3.74		5.31	3.87			
	CAT50-SX25M-0650-B	CAT50-SX25M-0650	1		-	4.92		6.50	3.80			
	CAT50-SX25M-0800-B	CAT50-SX25M-0800	1		-	6.10		8.00	3.87			

BT30 & BT30 SX Collet Chucks

Features

- **3 µm - 0.0001" Runout Taper to Taper**
- Coolant Thru Body
- Dynamically Pre-Balanced G2.5 @ 25,000 RPM or <1gmm
- Tapers are ground better than AT3 for optimal T.I.R.

Optional (Order Separately):

- Wrench
- Torque Wrench
- Collets
  - 0.005mm (0.0002") Standard
  - 0.003mm (0.0001") Ultra Precision
  - Sealed (Select Sizes)
  - Jet-Blast (Select Sizes)
- Fine Trim Balance (Sample cutter required for balance compensation)

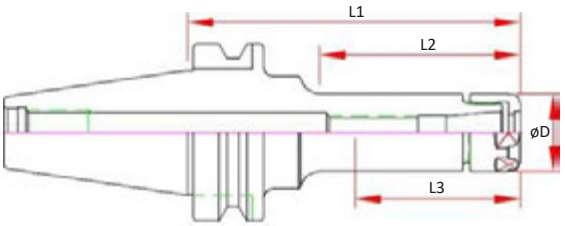

Dual Contact Spindle Part Number	Standard Spindle Part Number	D	L1 Projection	L2	L3 Max. Preset	Collet	Nut	Wrench
BT30-SX06-060-B	BT30-SX06-060	0.77	2.36	1.30	2.15	SX06	SXN-06	SXW-06
BT30-SX06–090-B	BT30-SX06–090		3.54	2.20	2.15			
BT30-SX10–060-B	BT30-SX10–060	1.08	2.36	1.38	2.30	SX10	SXN-10	SXW-10
BT30-SX10-090-B	BT30-SX10-090		3.54	2.56	2.40			
BT30-SX16–060-B	BT30-SX16–060	1.58	2.36	1.46	2.30	SX16	SXN-16	SXW-16
BT30-SX16-090-B	BT30-SX16-090		3.54	2.64	3.03**			
BT30-SX25M–070-B	BT30-SX25M–070	1.97	2.76	2.68	2.42	SX25	SXN-25	50-55 HOOK

** 10MM Tool Shanks & Smaller

BT40 & BT40 SX Collet Chucks

Features

- **3 µm - 0.0001" Runout Taper to Taper**
- Coolant Thru Body
- Dynamically Pre-Balanced G2.5 @ 25,000 RPM or <1gmm
- Tapers are ground better than AT3 for optimal T.I.R.

Optional (Order Separately):

- Wrench
- Torque Wrench
- Collets
  - 0.005mm (0.0002") Standard
  - 0.003mm (0.0001") Ultra Precision
  - Sealed (Select Sizes)
  - Jet-Blast (Select Sizes)
- DIN-B Coolant
- Fine Trim Balance (Sample cutter required for balance compensation)

STYLE - 1

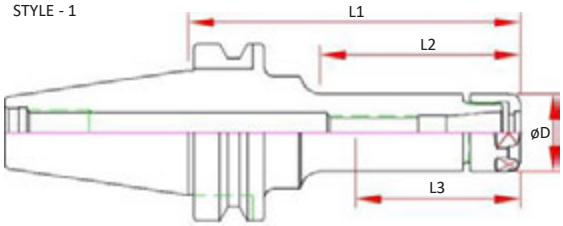

STYLE - 2

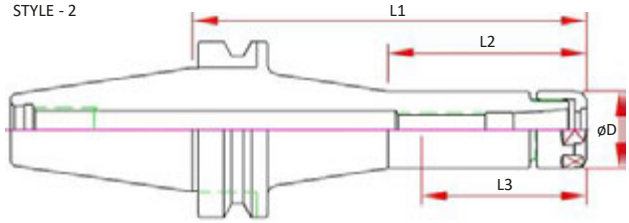

Dual Contact Spindle Part Number	Style	L2	D	L1 Projection	L3 Max. Preset	Collet	Nut	Wrench
BT40-SX06-090-B	1	2.36	0.77	3.54	2.16	SX06	SXN-06	SXW-06
BT40-SX06-120-B	2	2.36		4.72	2.00			
BT40-SX06-150-B	2	2.36		5.91	2.00			
BT40-SX10-060-B	1	1.18	1.08	2.36	2.20	SX10	SXN-10	SXW-10
BT40-SX10-090-B	1	2.36		3.54	2.76			
BT40-SX10-120-B	2	2.76		4.72	2.56			
BT40-SX10-150-B	2	2.87		5.91	2.76			
BT40-SX16-090-B	1	2.28	1.58	3.54	2.92	SX16	SXN-16	SXW-16
BT40-SX16-120-B	1	3.46		4.72	3.00			
BT40-SX16-150-B	1	4.64		5.91	3.00			
BT40-SX16-180-B	1	5.82		7.09	3.00			
BT40-SX25M-090-B	1	2.40	1.97	3.54	3.16	SX25	SXN-25M	50-55 HOOK
BT40-SX25M-120-B	1	2.40		4.72	3.16			

HSK063A SX Collet Chucks

Features

- **3 µm - 0.0001" Runout Taper to Taper**
- Coolant Thru Body
- Dynamically Pre-Balanced G2.5 @ 25,000 RPM or <1gmm

Optional (Order Separately):

- Wrench
- Torque Wrench
- Collets
  - 0.005mm (0.0002") Standard
  - 0.003mm (0.0001") Ultra Precision
  - Sealed (Select Sizes)
  - Jet-Blast (Select Sizes)
- Fine Trim Balance (Sample cutter required for balance compensation)

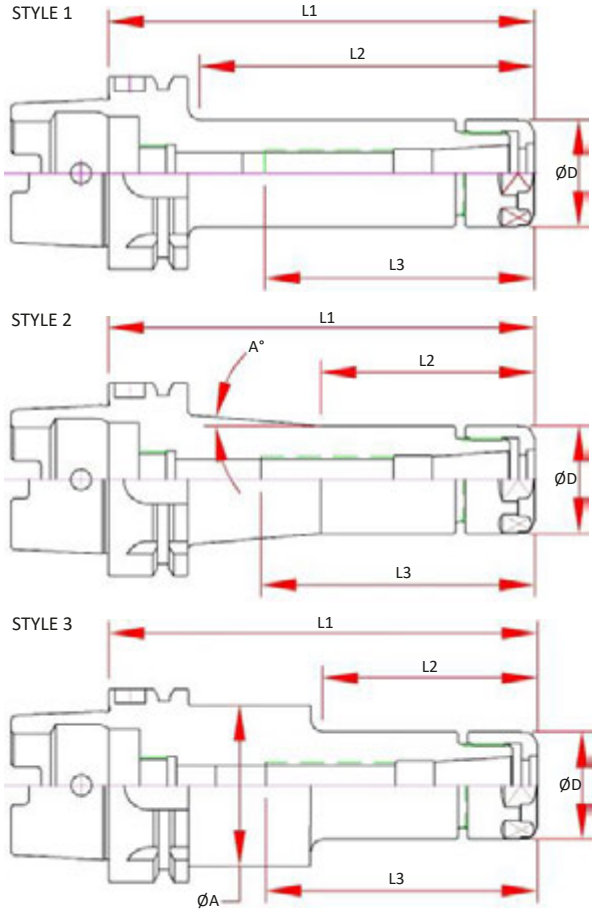

Part Number	Style	A	D	L Projection	L2	L3 Max. Preset	Collet	Nut	Wrench
HSK063A-SX06-100	1	-		3.94	1.97				
HSK063A-SX06-120	2	3°	0.77	4.72	2.36	1.73	SX06	SXN-06	SXW-06
HSK063A-SX06-150	3	Ø32		5.91	2.36				
HSK063A-SX10-105	1	-		4.13	2.91	1.65			
HSK063A-SX10-120	2	3°	1.08	4.72	2.36	1.89	SX10	SXN-10	SXW-10
HSK063A-SX10-150	3	Ø32		5.91	2.76	1.89			
HSK063A-SX16-120	1	-	1.58	4.72	3.50	2.44	SX16	SXN-16	SXW-16
HSK063A-SX16-150	1	-		5.91	4.68	2.83			
HSK063A-SX25M-090	1	-	1.97	3.54	2.52	2.44	SX25	SXN-25M	50-55 HOOK
HSK063A-SX25M-135	1	-		5.31	4.29	2.89			

HSK100A SX Collet Chucks

Features

- **3 µm - 0.0001" Runout Taper to Taper**
- Coolant Thru Body
- Dynamically Pre-Balanced G2.5 @ 25,000 RPM or <1gmm

Optional (Order Separately):

- Wrench
- Torque Wrench
- Collets
  - 0.005mm (0.0002") Standard
  - 0.003mm (0.0001") Ultra Precision
  - Sealed (Select Sizes)
  - Jet-Blast (Select Sizes)
- Fine Trim Balance (Sample cutter required for balance compensation)

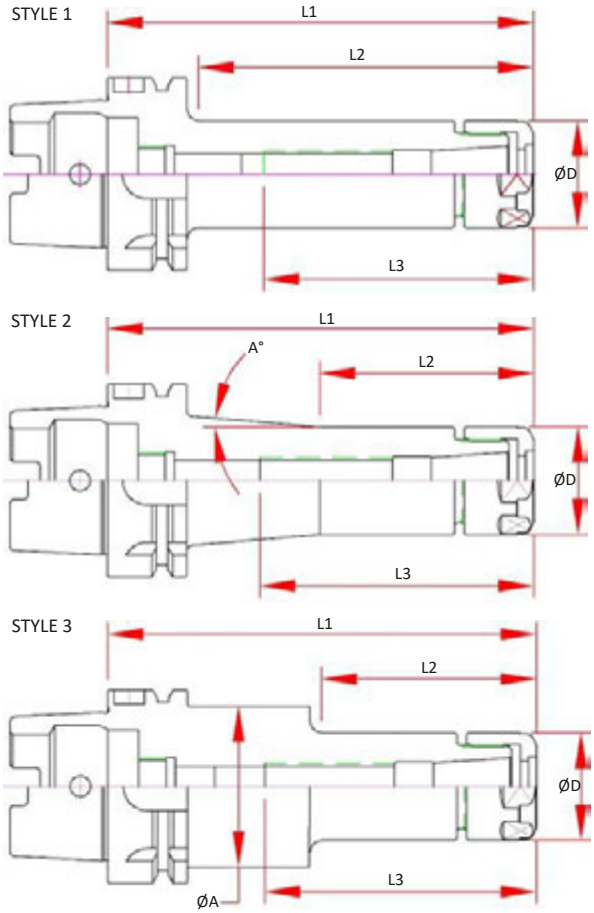

Part Number	Style	D	L1 Projection	L2	L3 Max. Preset	Collet	Nut	Wrench
HSK100A-SX10-105	1	1.08	4.13	2.83	1.65	SX10	SXN-10	SXW-10
HSK100A-SX10-150	3		5.91	2.76				
HSK100A-SX16-120	1	1.58	4.72	3.54	2.44	SX16	SXN-16	SXW-16
HSK100A-SX16-150	1		5.91	4.68				
HSK100A-SX16-200	1		7.87	4.50				
HSK100A-SX25M-095	1	1.97	3.74	2.60	2.44	SX25	SXN-25M	50-55 HOOK
HSK100A-SX25M-135	1		5.31	4.17	2.89			
HSK100A-SX25M-200	1		7.87	6.73	2.89			

SX Collet Nuts

Nut Part Number	Description	Wrench Part Number	O.D.	Hex	Thread	Max. Torque
SXN-06M	SX06 Mini Nut	ERW-11M	0.63	-	M13 x 0.75	9 ft/lbs
SXN-10M	SX10 Mini Nut	ERW-16M	0.87	-	M19 x 1.0	13 ft/lbs
SXN-06H	SX06 Hex Nut	SXW-06H	0.77	18mm	M15.5 x 1.0	22 ft/lbs
SXN-10H	SX10 Hex Nut	SXW-10H	1.08	25.4mm	M21.5 x 1.0	41 ft/lbs
SXN-16S	SX16 Spanner Nut	SXW-16S	1.58	-	M32 x 1.5	55 ft/lbs
SXN-25M	SX25 Mini Spanner Nut	50-55 HOOK	1.97	-	M45 x 1.5	85 ft/lbs
SXN-25MB	SX25 Mini Bearing Spanner Nut	50-55 HOOK	1.97	-	M45 x 1.5	120 ft/lbs

Preset Screws

- Solid Standard Screw
- Nylon Coolant Screw w/ O-Ring Optional

Screw Part Number	Description	Coolant Hole	O-Ring	Thread	Length mm	Wrench
ASC-8-24	SX06 Nylon Coolant Preset Screw	1.5	6mm OD x 1.0mm	M8 x 1.25	24	2.0mm Hex
ASC-12-30	SX10 Nylon Coolant Preset Screw	2.5	10mm OD x 1.5mm	M12 x 1.75	30	2.5mm & 5.0mm Hex
ASC-18-33	SX16 Nylon Coolant Preset Screw	3.0	14mm OD x 2.0mm	M18 x 1.5	33	5.0mm Hex
ASC-25-30	SX25 Nylon Coolant Preset Screw	4.0	17mm OD x 2.0mm	M25 x 2.0	30	4.0mm & 8.0mm Hex
ASC-28-34	SX25 Nylon Coolant Preset Screw	4.0	17mm OD x 2.0mm	M28 x 2.0	34	4.0mm & 8.0mm Hex

SX Collet Assembly Instructions

Set the small end of the collet remover on the taper

Push down on the collet remover until the slots collapse

Flip the collet over on the tail end

Set the collet nut on the collet

Push down on the collet remover, the collet will expand into the nut

SX Collet Assembly Tool

- Tool is required for assembly and removal of the SX collets from the nut.

NUT SERIES	PART NUMBER
SXN-06H & M	SXR-06
SXN-10H	SXR-10
SXN-10M	SXR-10M
SXN-16S	SXR-16
SXN-25S	SXR-25

SX Coolant Cap System

Seals Collet Chucks for Air/Coolant Thru applications and prevents dirt, chips & swarf from entering the slots of the collet.

What do you need?

- 1 SX Collet Chuck
- 1 SX Collet
- 1 SX Coolant Cap Nut
- 1 SX Coolant Cap

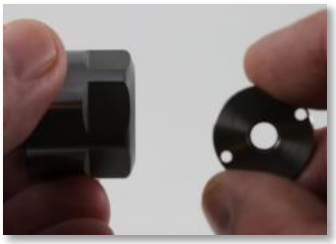

Thread Coolant Cap into SX nut, do not tighten, assemble the collet.

Insert cutting tool with the seal engaged on the round part of the shank, tighten cap.

SX Coolant Cap Nuts

Coolant Nut Part Number	Description	Type	Nut Wrench Part Number	Thread	Coolant Cap Wrench	Tightening Torque
SXCN-06	SX06 Coolant Cap Nut	Hex	SXW-06	M15.5 X 1.0	SXW-CC	22 ft/lbs
SXCN-10	SX10 Coolant Cap Nut	Hex	SXW-10	M21.5 X 1.0		41 ft/lbs
SXCN-16	SX16 Coolant Cap Nut	Spanner	SXW-16	M32 X 1.5		55 ft/lbs
SXCN-25	SX25 Coolant Cap Nut	Spanner	50-55 HOOK	M45 X 1.5		85 ft/lbs

SX Coolant Caps - Inch

Features

- O-ring seal for pressures up to 1500 PSI
- Prevents chips, dust & swarf from entering the holder
- Requires Coolant Cap Nut (See Above)
- Jet Blast for Non-Coolant Cutting Tools Available
    - Order by adding a "J" to the end of the part number

Inch Shank		MM	SX06	SX10	SX16	SX25
1/8	0.1250	3.175	SXC06-0125	SXC10-0125	SXC16-0125	
3/16	0.1875	4.763	SXC06-0187	SXC10-0187	SXC16-0187	SXC25-0187
1/4	0.2500	6.350	SXC06-0250	SXC10-0250	SXC16-0250	SXC25-0250
5/16	0.3125	7.938		SXC10-0312	SXC16-0312	SXC25-0312
3/8	0.3750	9.525		SXC10-0375	SXC16-0375	SXC25-0375
7/16	0.4375	11.113			SXC16-0437	SXC25-0437
1/2	0.5000	12.700			SXC16-0500	SXC25-0500
9/16	0.5625	14.288			SXC16-0562	SXC25-0562
5/8	0.6250	15.875			SXC16-0625	SXC25-0625
3/4	0.7500	19.050				SXC25-0750
7/8	0.8750	22.225				SXC25-0875
1	1.0000	25.400				SXC25-1000

SX Coolant Caps - Metric

Features

- O-ring seal for pressures up to 1500 PSI
- Prevents chips, dust & swarf from entering the holder
- Requires Coolant Cap Nut (See Previous Page)
- Jet Blast for Non-Coolant Cutting Tools Available
    - Order by adding a "J" to the end of the part number

MM	Inch	SX06	SX10	SX16	SX25
1.0	0.039	SXC06-M010	SXC10-M010		
1.5	0.059	SXC06-M015	SXC10-M015		
2.0	0.079	SXC06-M020	SXC10-M020		
2.5	0.098	SXC06-M025	SXC10-M025		
3.0	0.118	SXC06-M030	SXC10-M030	SXC16-M030	SXC25-M030
3.5	0.138	SXC06-M035	SXC10-M035	SXC16-M035	SXC25-M035
4.0	0.157	SXC06-M040	SXC10-M040	SXC16-M040	SXC25-M040
4.5	0.177	SXC06-M045	SXC10-M045	SXC16-M045	SXC25-M045
5.0	0.197	SXC06-M050	SXC10-M050	SXC16-M050	SXC25-M050
5.5	0.217	SXC06-M055	SXC10-M055	SXC16-M055	SXC25-M055
6.0	0.236	SXC06-M060	SXC10-M060	SXC16-M060	SXC25-M060
6.5	0.256		SXC10-M065	SXC16-M065	SXC25-M065
7.0	0.276		SXC10-M070	SXC16-M070	SXC25-M070
7.5	0.295		SXC10-M075	SXC16-M075	SXC25-M075
8.0	0.315		SXC10-M080	SXC16-M080	SXC25-M080
8.5	0.335		SXC10-M085	SXC16-M085	SXC25-M085
9.0	0.354		SXC10-M090	SXC16-M090	SXC25-M090
9.5	0.374		SXC10-M095	SXC16-M095	SXC25-M095
10.0	0.394		SXC10-M100	SXC16-M100	SXC25-M100
10.5	0.413			SXC16-M105	SXC25-M105
11.0	0.433			SXC16-M110	SXC25-M110
11.5	0.453			SXC16-M115	SXC25-M115
12.0	0.472			SXC16-M120	SXC25-M120
12.5	0.492			SXC16-M125	SXC25-M125
13.0	0.512			SXC16-M130	SXC25-M130
13.5	0.531			SXC16-M135	SXC25-M135
14.0	0.551			SXC16-M140	SXC25-M140
14.5	0.571			SXC16-M145	SXC25-M145
15.0	0.591			SXC16-M150	SXC25-M150
15.5	0.610			SXC16-M155	SXC25-M155
16.0	0.630			SXC16-M160	SXC25-M160
16.5	0.650				SXC25-M165
17.0	0.669				SXC25-M170
17.5	0.689				SXC25-M175
18.0	0.709				SXC25-M180
18.5	0.728				SXC25-M185
19.0	0.748				SXC25-M190
19.5	0.768				SXC25-M195
20.0	0.787				SXC25-M200
20.5	0.807				SXC25-M205
21.0	0.827				SXC25-M210
21.5	0.846				SXC25-M215
22.0	0.866				SXC25-M220
22.5	0.886				SXC25-M225
23.0	0.906				SXC25-M230
23.5	0.925				SXC25-M235
24.0	0.945				SXC25-M240
24.5	0.965				SXC25-M245
25.0	0.984				SXC25-M250

SX Collet Sets

Features

- 5 µm - 0.0002" or Better
- Includes Collet Tray
  Note: Collet Tray includes positions for Inch and Metric collets, will not be filled unless all sizes are ordered

Part Number	Chuck Size	Pieces	Range	Increments	Collapse	Includes Tray
Metric						
SX06-MSET-07	SX06	7	3.0mm - 6.0mm	0.5mm	0.5mm	SX06 TRAY
SX10-MSET-15	SX10	15	3.0mm - 10.0mm	0.5mm	0.5mm	SX10 TRAY
SX10-MSET-08	SX10	8	3.0mm - 10.0mm	1.0mm	0.5mm	SX10 TRAY
SX16-MSET-27	SX16	27	3.0mm - 16.0mm	0.5mm	0.5mm	SX16 TRAY
SX16-MSET-14	SX25	14	3.0mm - 16.0mm	1.0mm	0.5mm	SX16 TRAY
SX25-MSET-14	SX25	14	12.0mm - 25.0mm	0.5mm	0.5mm	SX25 TRAY
SX25-MSET-10	SX25	10	16.0mm - 25.0mm	1.0mm	0.5mm	SX25 TRAY
Inch						
SX06-iSET-05	SX06	5	1/8 - 1/4"	1/32 "	0.02"	SX06 TRAY
SX10-iSET-09	SX10	9	1/8 - 3/8"	1/32 "	0.02"	SX10 TRAY
SX10-iSET-05	SX10	5	1/8 - 3/8"	1/16 "	0.02"	SX10 TRAY
SX16-iSET-17	SX16	17	1/8 - 5/8"	1/32 "	0.02"	SX16 TRAY
SX16-iSET-09	SX16	9	1/8 - 5/8"	1/16 "	0.02"	SX16 TRAY
SX25-iSET-15	SX25	15	1/8 - 1"	1/16 "	0.02"	SX25 TRAY
SX25-iSET-08	SX25	8	1/8 - 1"	1/8 "	0.02"	SX25 TRAY

SX Collet Trays

Features

- Collet Tray includes positions for Inch and Metric collets.
- Steel Construction with Sizes Laser marked

Part Number	Amount of Collets
SX06 TRAY	12
SX10 TRAY	24
SX16 TRAY	44
SX25 TRAY	29

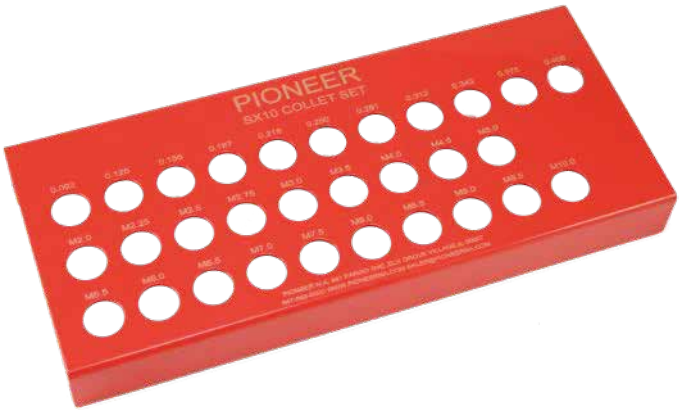

SX Collets

Features

- 5µm - 0.0002" T.I.R. @ 4X tool diameter
  3µm - 0.0001" T.I.R. @ 4X tool diameter
  —Add "P" to the collet part number
  (Hand Inspected from Inventory)

- Up to 0.020" (0.5mm) Collapse Range 3mm (1/8, 0.1250") & Larger >3mm for use ON-Size
  -P Collets for use ON-Size

SX06 Collets

SX06 Inch		Precision	Ultra Precision
Inch		5 Micron @ 4D	3 Micron @ 4D
		SX06	SX06-P
1/8	0.1250	SX06-0125	SX06-0125-P
5/32	0.1563	SX06-0156	SX06-0156-P
3/16	0.1875	SX06-0187	SX06-0187-P
7/32	0.2188	SX06-0218	SX06-0218-P
1/4	0.2500	SX06-0250	SX06-0250-P

SX06 Metric		Precision	Ultra Precision
MM	MM in INCH	5 Micron @ 4D	3 Micron @ 4D
		SX06	SX06-P
0.80	0.0315	SX06-M008	
1.00	0.0394	SX06-M010	
1.25	0.0492	SX06-M0125	
1.50	0.0591	SX06-M015	
1.75	0.0689	SX06-M0175	
2.00	0.0787	SX06-M020	
2.25	0.0886	SX06-M0225	
2.50	0.0984	SX06-M025	
2.75	0.1083	SX06-M0275	
3.00	0.1181	SX06-M030	SX06-M030-P
3.50	0.1378	SX06-M035	SX06-M035-P
4.00	0.1575	SX06-M040	SX06-M040-P
4.50	0.1772	SX06-M045	SX06-M045-P
5.00	0.1969	SX06-M050	SX06-M050-P
5.50	0.2165	SX06-M055	SX06-M055-P
6.00	0.2362	SX06-M060	SX06-M060-P

SX10 Collets

SX10 Inch		Precision	Ultra Precision
Inch		5 Micron @ 4D	3 Micron @ 4D
		SX10	SX10-P
1/8	0.1250	SX10-0125	SX10-0125-P
5/32	0.1563	SX10-0156	SX10-0156-P
3/16	0.1875	SX10-0187	SX10-0187-P
7/32	0.2188	SX10-0218	SX10-0218-P
1/4	0.2500	SX10-0250	SX10-0250-P
9/32	0.2813	SX10-0281	SX10-0281-P
5/16	0.3125	SX10-0312	SX10-0312-P
11/32	0.3438	SX10-0343	SX10-0343-P
3/8	0.3750	SX10-0375	SX10-0375-P

SX10 Metric		Precision	Ultra Precision
MM	MM in INCH	5 Micron @ 4D	3 Micron @ 4D
		SX10	SX10-P
2.00	0.0787	SX10-M020	
2.25	0.0886	SX10-M0225	
2.50	0.0984	SX10-M025	
2.75	0.1083	SX10-M0275	
3.00	0.1181	SX10-M030	SX10-M030-P
3.50	0.1378	SX10-M035	SX10-M035-P
4.00	0.1575	SX10-M040	SX10-M040-P
4.50	0.1772	SX10-M045	SX10-M045-P
5.00	0.1969	SX10-M050	SX10-M050-P
5.50	0.2165	SX10-M055	SX10-M055-P
6.00	0.2362	SX10-M060	SX10-M060-P
6.50	0.2559	SX10-M065	SX10-M065-P
7.00	0.2756	SX10-M070	SX10-M070-P
7.50	0.2953	SX10-M075	SX10-M075-P
8.00	0.3150	SX10-M080	SX10-M080-P
8.50	0.3346	SX10-M085	SX10-M085-P
9.00	0.3543	SX10-M090	SX10-M090-P
9.50	0.3740	SX10-M095	SX10-M095-P
10.00	0.3937	SX10-M100	SX10-M100-P

SX16 Collets

Features

- 5µm - 0.0002" T.I.R. @ 4X tool diameter
  3µm - 0.0001" T.I.R. @ 4X tool diameter—Add "P" to the collet part number
  (Hand Inspected from Inventory)
- Flat ground shoulder guarantees the collet to be seated correctly for optimal repeatability.
- Up to 0.020" (0.5mm) Collapse Range 3mm (1/8, 0.1250") & Larger
  P Collets for use ON-Size

SX16 Inch		Precision	Ultra Precision
Inch		5 Micron @ 4D	3 Micron @ 4D
		SX16	SX16-P
1/8	0.1250	SX16-0125	SX16-0125P
5/32	0.1563	SX16-0156	SX16-0156P
3/16	0.1875	SX16-0187	SX16-0187P
7/32	0.2188	SX16-0218	SX16-0218P
1/4	0.2500	SX16-0250	SX16-0250P
9/32	0.2813	SX16-0281	SX16-0281P
5/16	0.3125	SX16-0312	SX16-0312P
11/32	0.3438	SX16-0343	SX16-0343P
3/8	0.3750	SX16-0375	SX16-0375P
13/32	0.4063	SX16-0406	SX16-0406P
7/16	0.4375	SX16-0437	SX16-0437P
15/32	0.4688	SX16-0468	SX16-0468P
1/2	0.5000	SX16-0500	SX16-0500P
17/32	0.5313	SX16-0531	SX16-0531P
9/16	0.5625	SX16-0562	SX16-0562P
19/32	0.5938	SX16-0593	SX16-0593P
5/8	0.6250	SX16-0625	SX16-0625P

SX16 Metric		Precision	Ultra Precision
MM	MM in INCH	5 Micron @ 4D	3 Micron @ 4D
		SX16	SX16-P
3.00	0.1181	SX16-M030	SX16-M030P
3.50	0.1378	SX16-M035	SX16-M035P
4.00	0.1575	SX16-M040	SX16-M040P
4.50	0.1772	SX16-M045	SX16-M045P
5.00	0.1969	SX16-M050	SX16-M050P
5.50	0.2165	SX16-M055	SX16-M055P
6.00	0.2362	SX16-M060	SX16-M060P
6.50	0.2559	SX16-M065	SX16-M065P
7.00	0.2756	SX16-M070	SX16-M070P
7.50	0.2953	SX16-M075	SX16-M075P
8.00	0.3150	SX16-M080	SX16-M080P
8.50	0.3346	SX16-M085	SX16-M085P
9.00	0.3543	SX16-M090	SX16-M090P
9.50	0.3740	SX16-M095	SX16-M095P
10.00	0.3937	SX16-M100	SX16-M100P
10.50	0.4134	SX16-M105	SX16-M105P
11.00	0.4331	SX16-M110	SX16-M110P
11.50	0.4528	SX16-M115	SX16-M115P
12.00	0.4724	SX16-M120	SX16-M120P
12.50	0.4921	SX16-M125	SX16-M125P
13.00	0.5118	SX16-M130	SX16-M130P
13.50	0.5315	SX16-M135	SX16-M135P
14.00	0.5512	SX16-M140	SX16-M140P
14.50	0.5709	SX16-M145	SX16-M145P
15.00	0.5906	SX16-M150	SX16-M150P
15.50	0.6102	SX16-M155	SX16-M155P
16.00	0.6299	SX16-M160	SX16-M160P

SX25 Collets

Features

- 5µm - 0.0002" T.I.R. @ 4X tool diameter
  3µm - 0.0001" T.I.R. @ 4X tool diameter—Add "P" to the collet part number
  (Hand Inspected from Inventory)
- Flat ground shoulder guarantees the collet to be seated correctly for optimal repeatability.
- Up to 0.020" (0.5mm) Collapse Range 3mm (1/8, 0.1250") & Larger
  P Collets for use ON-Size

SX25 Inch		Precision	Ultra Precision
Inch		5 Micron @ 4D	3 Micron @ 4D
		SX25	SX25-P
1/8	0.1250	SX25-0125	SX25-0125P
3/16	0.1875	SX25-0187	SX25-0187P
1/4	0.2500	SX25-0250	SX25-0250P
5/16	0.3125	SX25-0312	SX25-0312P
3/8	0.3750	SX25-0375	SX25-0375P
7/16	0.4375	SX25-0437	SX25-0437P
1/2	0.5000	SX25-0500	SX25-0500P
9/16	0.5625	SX25-0562	SX25-0562P
5/8	0.6250	SX25-0625	SX25-0625P
11/16	0.6875	SX25-0687	SX25-0687P
3/4	0.7500	SX25-0750	SX25-0750P
13/16	0.8125	SX25-0812	SX25-0812P
7/8	0.8750	SX25-0875	SX25-0875P
15/16	0.9375	SX25-0937	SX25-0937P
1	1.0000	SX25-1000	SX25-1000P

SX25 Metric		Precision	Ultra Precision
MM	MM in INCH	5 Micron @ 4D	3 Micron @ 4D
		SX25	SX25-P
12.0	0.4724	SX25-M120	SX25-M120P
13.0	0.5118	SX25-M130	SX25-M130P
14.0	0.5512	SX25-M140	SX25-M140P
15.0	0.5906	SX25-M150	SX25-M150P
16.0	0.6299	SX25-M160	SX25-M160P
17.0	0.6693	SX25-M170	SX25-M170P
18.0	0.7087	SX25-M180	SX25-M180P
19.0	0.7480	SX25-M190	SX25-M190P
20.0	0.7874	SX25-M200	SX25-M200P
21.0	0.8268	SX25-M210	SX25-M210P
22.0	0.8661	SX25-M220	SX25-M220P
23.0	0.9055	SX25-M230	SX25-M230P
24.0	0.9449	SX25-M240	SX25-M240P
25.0	0.9843	SX25-M250	SX25-M250P

Premium Shrink Fit Performance

- 0.0001" TIR Guaranteed @ Bore
- Manufactured from ISO-40CrMoV5 (H13) Material, Heat Treated for Optimum Elasticity and Tool Life
- Tolerance and Ground for as close to 10,000 lbs of pull out force or higher (cutter shank finish may effect results)
- Designed for Performance Milling with Neutral flute geometry, not designed for hi-helix applications
  For Carbide Cutting Tools with h6 shank tolerance
- Dynamically Balanced for G2.5 @ 25,000 RPM or < 1 gmm's
- Tapers are ground better than AT3 for optimal T.I.R.

Jet-Blast Options to fit YOUR Application

We at Pioneer have invested in an EDM Drilling machine which allow us to customize Jet-Blast coolant holes to your application.

2 - Port Jet-Blast

Same tool shot with a High Speed Shutter

Every Jet-Blast Holder or collet comes with 2 ports standard. Depending on style and type we have the ability of adding as many holes as your coolant volume can support without losing pressure.

Highest Quality - Designed to Last

PIONEER Shrink Fit is manufactured from ISO-40CrMoV5 Tool Steel, Double Tempered at 1050°F to withstand up to 10,000 tool changes.

All holders are 100% inspected on Air/Electronic gaging and the ID is ground for a maximum of 3 microns (0.0001") Runout (TIR) in the Bore.

Dynamically Balanced

PIONEER Tapered Shrink Fit Holders are Dynamically Balanced for G2.5 @ 25,000 RPM or < 1 gmm's

Any standard Shrink can be modified from stock. Adding a "J" to the end of the part number will provide you with 2 coolant ports. Need additional ports? Add "J 6-Port" to the part number for additional 4 ports (additional fees will apply).

EZ Shrink Pack

Complete Shrink Fit Heating & Water Cooling System

What's Included in the Package:

EZ Shrink Unit

* #EZ-SHRINK-EZ3K
* 1/8-3/4 Capacity
  (1-1/4 with Optional Coil)
* 220V, 20A Single Phase Power
* 3kw Output
* For tools with up to a 12.50 Projection
* 1 Year Limited Warranty
* **30 Second Cycle Time**

EZ Cooling Unit

* #EZ-COOL-EZ3W-KIT
* Water Cooling with Shop Coolant
  (Water Based)
* Separate Cooling, cool 1st tool while heating the 2nd
* 110V, 16A
* 1 Year Limited Warranty
* **30 Second Cycle Time**

(2) EZ-Base
Tool Holder Base

EZ-COOL-EXT
Cooling Extension

EZ-GLOVE
Safety Gloves

EZ-ROUND-TRAY
Cutter Storage Tray

(5) Shrink Fit Holders

Pick any 5 standard length holders listed on the back page.

***Optional 1-1/4 Heating Coil**
EZ-SHRINK-EZ3K COIL 32MM
Required for 1" and 1-1/4" Holders

CAT40 Shrink Fit - Inch

Features

- 3 µm - 0.0001" Runout Taper to Bore
- Manufactured from ISO-40CrMoV5 (H13) Material, Heat Treated for Optimum Elasticity and Tool Life
- Coolant Thru the Center
- Tapers are ground better than AT3 for optimal T.I.R.
- Dynamically Balanced for G2.5 @ 25,000 RPM or < 1 gmm
- Preset Screw included for 1/4" & larger for positive stop
- **Designed for Carbide Cutting Tools with h6 shank tolerance**

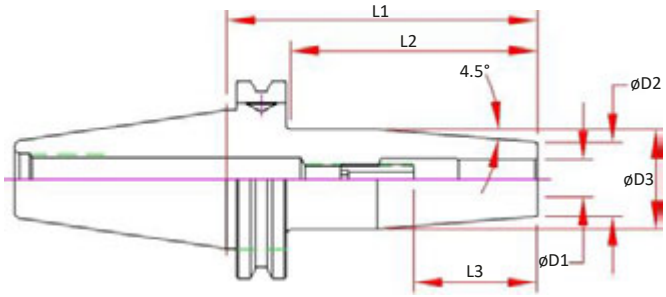

Optional (Order Separately):

- Jet-Blast Coolant Ports - Add "-J"
- DIN-B Coolant - Add "-D"
- Fine Trim Balance (Sample cutter required for balance compensation)


P-134

Dual Contact Spindle Part Number	Standard Spindle Part Number	D1 Bore	D2	D3	L1 Projection	L2	L3 Max Tool Enters	Preset Screw
CAT40-SD012-080-B	CAT40-SD012-080	0.1250	0.39	0.77	3.15	2.28	4.57	-
CAT40-SD012-160-B	CAT40-SD012-160	0.1250	0.39	0.77	6.30	5.43	7.73	-
CAT40-SD018-080-B	CAT40-SD018-080	0.1875	0.39	0.77	3.15	2.28	4.57	-
CAT40-SD018-160-B	CAT40-SD018-160	0.1875	0.39	0.77	6.30	5.43	7.73	-
CAT40-SD025-080-B	CAT40-SD025-080	0.2500	0.83	1.06	3.15	2.28	1.54	SCW-ASC-05-23
CAT40-SD025-160-B	CAT40-SD025-160	0.2500	0.83	1.06	6.30	5.43	1.54	SCW-ASC-05-23
	CAT40-SD031-080	0.3125	0.83	1.06	3.15	2.28	1.54	SCW-ASC-06-23
	CAT40-SD031-160	0.3125	0.83	1.06	6.30	5.43	1.54	SCW-ASC-06-23
CAT40-SD037-080-B	CAT40-SD037-080	0.3750	0.94	1.26	3.15	2.28	1.73	SCW-ASC-08-23
CAT40-SD037-160-B	CAT40-SD037-160	0.3750	0.94	1.26	6.30	5.43	1.73	SCW-ASC-08-23
	CAT40-SD043-080	0.4375	0.94	1.26	3.15	2.28	1.73	SCW-ASC-08-23
	CAT40-SD043-160	0.4375	0.94	1.26	6.30	5.43	1.73	SCW-ASC-08-23
CAT40-SD050-080-B	CAT40-SD050-080	0.5000	0.94	1.26	3.15	2.28	1.97	SCW-ASC-10-23
CAT40-SD050-160-B	CAT40-SD050-160	0.5000	0.94	1.26	6.30	5.43	1.97	SCW-ASC-10-23
CAT40-SD062-080-B	CAT40-SD062-080	0.6250	1.06	1.34	3.15	2.28	2.09	SCW-ASC-12-23
	CAT40-SD062-160	0.6250	1.06	1.34	6.30	5.43	2.09	SCW-ASC-12-23
CAT40-SD075-080-B	CAT40-SD075-080	0.7500	1.30	1.65	3.15	2.28	2.09	SCW-ASC-12-23
CAT40-SD075-160-B	CAT40-SD075-160	0.7500	1.30	1.65	6.30	5.43	2.09	SCW-ASC-12-23
	CAT40-SD087-080	0.8750	1.30	1.65	3.15	2.28	2.09	SCW-ASC-12-23
CAT40-SD100-100-B	CAT40-SD100-100	1.0000	1.73	2.09	3.94	3.07	2.28	SCW-ASC-16-23
	CAT40-SD100-160	1.0000	1.73	2.09	6.30	5.43	2.28	SCW-ASC-16-23
	CAT40-SD125-100	1.2500	1.73	2.09	3.94	3.07	2.28	SCW-ASC-16-23
	CAT40-SD125-160	1.2500	1.73	2.09	6.30	5.43	2.28	SCW-ASC-16-23

CAT40 Shrink Fit - Metric

Features

- 3 µm - 0.0001" Runout Taper to Bore
- Manufactured from ISO-40CrMoV5 (H13) Material, Heat Treated for Optimum Elasticity and Tool Life
- Coolant Thru the Center
- Tapers are ground better than AT3 for optimal T.I.R.
- Dynamically Balanced for G2.5 @ 25,000 RPM or < 1 gmm
- Preset Screw included for 1/4" & larger for positive stop
- **Designed for Carbide Cutting Tools with h6 shank tolerance**

Optional (Order Separately):

- Jet-Blast Coolant Ports - Add "J"
- DIN-B Coolant - Add "D"
- Fine Trim Balance (Sample cutter required for balance compensation)

Style – 1

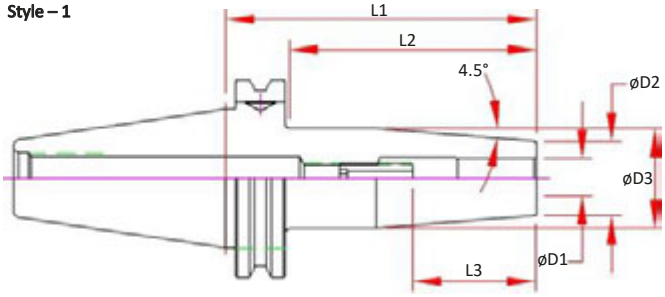

Style – 3

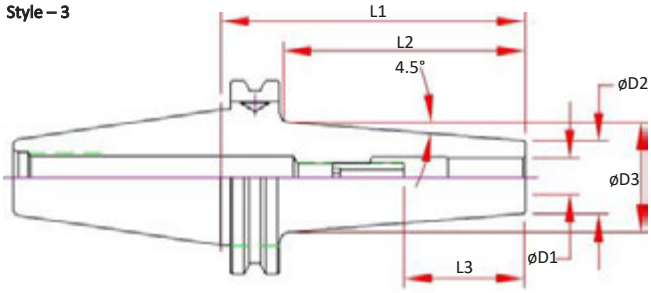

Part Number	D1 Bore	D2	D3	L1 Projection	L2	L3 Max Tool Enters	Preset Screw	Style
CAT40-SDM03-080	3.000	0.39	0.75	3.15	2.28	4.57	-	1
CAT40-SDM03-160	3.000	0.39	0.75	6.30	5.43	7.73	-	3
CAT40-SDM04-080	4.000	0.39	0.75	3.15	2.28	4.57	-	1
CAT40-SDM04-160	4.000	0.39	0.75	6.30	5.43	7.73	-	3
CAT40-SDM06-080	6.000	0.83	1.06	3.15	2.28	1.54	SCW-ASC-05-23	1
CAT40-SDM06-160	6.000	0.83	1.06	6.30	5.43	1.54	SCW-ASC-05-23	2
CAT40-SDM08-080	8.000	0.83	1.06	3.15	2.28	1.54	SCW-ASC-06-23	1
CAT40-SDM08-160	8.000	0.83	1.06	6.30	5.43	1.54	SCW-ASC-06-23	1
CAT40-SDM10-080	10.000	0.94	1.26	3.15	2.28	1.73	SCW-ASC-08-23	1
CAT40-SDM10-160	10.000	0.94	1.26	6.30	5.43	1.73	SCW-ASC-08-23	1
CAT40-SDM12-080	12.000	0.94	1.26	3.15	2.28	1.97	SCW-ASC-10-23	1
CAT40-SDM12-160	12.000	0.94	1.26	6.30	5.43	1.97	SCW-ASC-10-23	1
CAT40-SDM16-080	16.000	1.06	1.34	3.15	2.28	1.97	SCW-ASC-12-23	1
CAT40-SDM16-160	16.000	1.06	1.34	6.30	5.43	1.97	SCW-ASC-12-23	1
CAT40-SDM20-080	20.000	1.30	1.65	3.15	2.28	2.17	SCW-ASC-12-23	1
CAT40-SDM20-160	20.000	1.30	1.65	6.30	5.43	2.17	SCW-ASC-12-23	1
CAT40-SDM25-100	25.000	1.73	2.09	3.94	3.07	2.28	SCW-ASC-16-23	1
CAT40-SDM32-100	32.000	1.73	2.09	3.94	3.07	2.28	SCW-ASC-16-23	1

CAT50 Shrink Fit - Inch

Features

- 3 µm - 0.0001" Runout Taper to Bore
- Manufactured from ISO-40CrMoV5 (H13) Material, Heat Treated for Optimum Elasticity and Tool Life
- Coolant Thru the Center
- Tapers are ground better than AT3 for optimal T.I.R.
- Dynamically Balanced for G2.5 @ 25,000 RPM or < 1 gmm
- Preset Screw included for 1/4" & larger for positive stop
- **Designed for Carbide Cutting Tools with h6 shank tolerance**

Optional (Order Separately):

- Jet-Blast Coolant Ports - Add "-J"
- DIN-B Coolant - Add "-D"
- Fine Trim Balance (Sample cutter required for balance compensation)

Style – 1

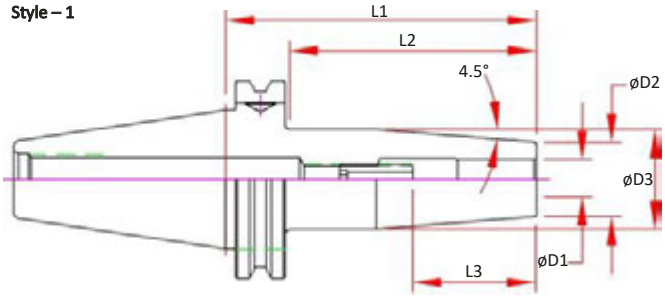

Style – 2

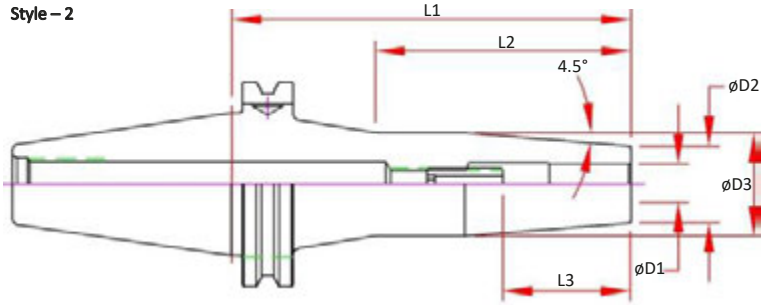

Part Number	D1 Bore	D2	D3	L1 Projection	L2	L3 Max Tool Enters	Preset Screw	Style
CAT50-SD025-080	0.2500	0.83	1.06	3.15	2.32	1.46	SCW-ASC-05-23	1
CAT50-SD025-160	0.2500	0.83	1.06	6.30	2.76	1.46	SCW-ASC-05-23	2
CAT50-SD031-080	0.3125	0.83	1.06	3.15	2.32	1.46	SCW-ASC-06-23	1
CAT50-SD031-160	0.3125	0.83	1.06	6.30	2.76	1.46	SCW-ASC-06-23	2
CAT50-SD037-080	0.3750	0.94	1.24	3.15	2.32	1.65	SCW-ASC-08-23	1
CAT50-SD037-160	0.3750	0.94	1.26	6.30	2.76	1.65	SCW-ASC-08-23	2
CAT50-SD050-080	0.5000	0.94	1.24	3.15	2.32	1.65	SCW-ASC-10-23	1
CAT50-SD050-160	0.5000	0.94	1.26	6.30	2.76	1.65	SCW-ASC-10-23	2
CAT50-SD062-080	0.6250	1.06	1.34	3.15	2.32	2.01	SCW-ASC-12-23	1
CAT50-SD062-160	0.6250	1.06	1.34	6.30	2.76	2.01	SCW-ASC-12-23	2
CAT50-SD075-080	0.7500	1.30	1.61	3.15	2.32	2.09	SCW-ASC-12-23	1
CAT50-SD075-160	0.7500	1.30	1.61	6.30	3.35	2.09	SCW-ASC-12-23	2
CAT50-SD100-100	1.0000	1.73	2.09	3.94	3.11	2.32	SCW-ASC-16-23	1
CAT50-SD100-160	1.0000	1.73	2.09	6.30	3.35	2.32	SCW-ASC-16-23	2
CAT50-SD125-100	1.2500	1.73	2.09	3.94	3.11	2.48	SCW-ASC-16-23	1
CAT50-SD125-160	1.2500	1.73	2.09	6.30	3.35	2.48	SCW-ASC-16-23	2

CAT50 Shrink Fit - Metric

Features

- 3 µm - 0.0001" Runout Taper to Bore
- Manufactured from ISO-40CrMoV5 (H13) Material, Heat Treated for Optimum Elasticity and Tool Life
- Coolant Thru the Center
- Tapers are ground better than AT3 for optimal T.I.R.
- Dynamically Balanced for G2.5 @ 25,000 RPM or < 1 gmm
- Preset Screw included for 1/4" & larger for positive stop
- **Designed for Carbide Cutting Tools with h6 shank tolerance**

Optional (Order Separately):

- Jet-Blast Coolant Ports - Add "J"
- DIN-B Coolant - Add "D"
- Fine Trim Balance (Sample cutter required for balance compensation)

Style – 1

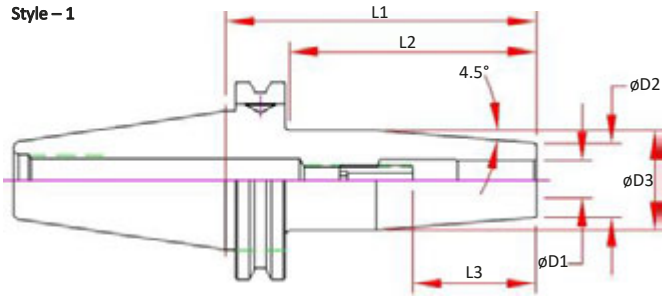

Style – 2

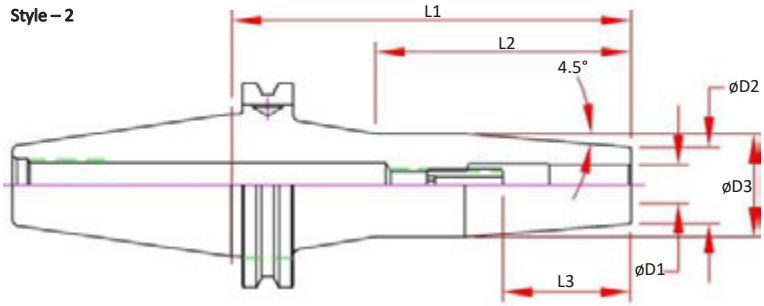

Part Number	D1 Bore	D2	D3	L1 Projection	L2	L3 Max Tool Enters	Preset Screw	Style
CAT50-SDM06-080	6	21	27	80	59	37	SCW-ASC-05-23	1
CAT50-SDM06-160	6	21	27	160	70	37	SCW-ASC-05-23	2
CAT50-SDM08-080	8	21	27	80	59	37	SCW-ASC-06-23	1
CAT50-SDM08-160	8	21	27	160	70	37	SCW-ASC-06-23	2
CAT50-SDM10-080	10	24	32	80	59	42	SCW-ASC-08-23	1
CAT50-SDM10-160	10	24	32	160	70	42	SCW-ASC-08-23	2
CAT50-SDM12-080	12	24	32	80	59	48	SCW-ASC-10-23	1
CAT50-SDM12-160	12	24	32	160	70	48	SCW-ASC-10-23	2
CAT50-SDM16-080	16	27	34	80	59	51	SCW-ASC-12-23	1
CAT50-SDM16-160	16	27	34	160	70	51	SCW-ASC-12-23	2
CAT50-SDM20-080	20	33	42	80	59	53	SCW-ASC-12-23	1
CAT50-SDM20-160	20	33	42	160	70	53	SCW-ASC-12-23	2
CAT50-SDM25-100	25	44	53	100	79	59	SCW-ASC-16-23	1
CAT50-SDM25-160	25	44	53	160	85	59	SCW-ASC-16-23	2
CAT50-SDM32-100	32	44	53	100	79	63	SCW-ASC-16-23	1
CAT50-SDM32-160	32	44	53	160	85	63	SCW-ASC-16-23	2

HSK063A Shrink Fit - Inch

Features

- 3 µm - 0.0001” Runout Taper to Bore
- Manufactured from ISO-40CrMoV5 (H13) Material, Heat Treated for Optimum Elasticity and Tool Life
- Coolant Thru the Center
- Dynamically Balanced for G2.5 @ 25,000 RPM or < 1 gmm
- Preset Screw included for 1/4” & larger for positive stop
- **Designed for Carbide Cutting Tools with h6 shank tolerance**

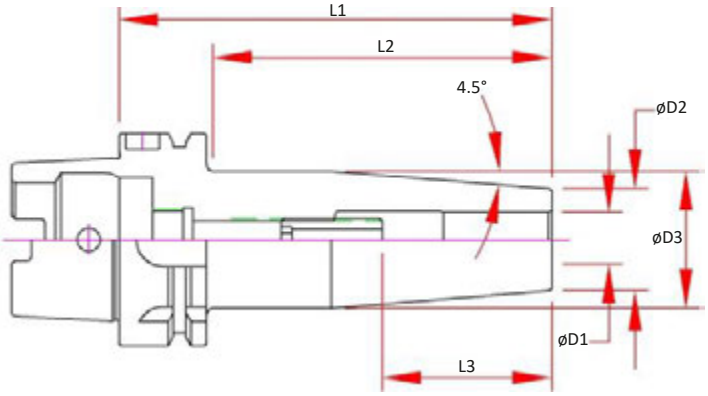

Optional (Order Separately):

- Jet-Blast Coolant Ports - Add “-J”
- Fine Trim Balance (Sample cutter required for balance compensation)


P-137

Part Number	D1 Bore	D2	D3	L1 Projection	L2	L3 Max Tool Enters	Preset Screw
HSK063A-SD012-080	0.1250	0.39	0.71	3.15	2.02	2.28	-
HSK063A-SD012-160	0.1250	0.39	0.75	6.30	5.16	5.43	-
HSK063A-SD018-080	0.1875	0.39	0.71	3.15	2.02	2.28	-
HSK063A-SD018-160	0.1875	0.39	0.75	6.30	5.16	5.43	-
HSK063A-SD025-080	0.2500	0.83	1.06	3.15	2.02	1.54	SCW-ASC-05-23
HSK063A-SD025-160	0.2500	0.83	1.06	6.30	5.16	1.54	SCW-ASC-05-23
HSK063A-SD037-085	0.3750	0.94	1.06	3.35	2.21	1.73	SCW-ASC-08-23
HSK063A-SD037-160	0.3750	0.94	1.06	6.30	5.16	1.73	SCW-ASC-08-23
HSK063A-SD050-090	0.5000	0.94	1.26	3.54	2.41	1.97	SCW-ASC-10-23
HSK063A-SD050-160	0.5000	0.94	1.26	6.30	5.16	1.97	SCW-ASC-10-23
HSK063A-SD062-095	0.6250	1.06	1.34	3.74	2.61	1.97	SCW-ASC-12-23
HSK063A-SD062-160	0.6250	1.06	1.34	6.30	5.16	1.97	SCW-ASC-12-23
HSK063A-SD075-100	0.7500	1.30	1.65	3.94	2.80	2.05	SCW-ASC-12-23
HSK063A-SD075-160	0.7500	1.30	1.65	6.30	5.16	2.05	SCW-ASC-12-23
HSK063A-SD100-115	1.0000	1.73	2.09	4.53	3.50	2.28	SCW-ASC-16-23
HSK063A-SD100-160	1.0000	1.73	2.09	6.30	5.16	2.28	SCW-ASC-16-23
HSK063A-SD125-120	1.2500	1.73	2.09	4.72	3.70	2.40	SCW-ASC-16-23
HSK063A-SD125-160	1.2500	1.73	2.09	6.30	5.16	2.40	SCW-ASC-16-23

HSK063A Shrink Fit - Metric

Features

- 3 µm - 0.0001” Runout Taper to Bore
- Manufactured from ISO-40CrMoV5 (H13) Material, Heat Treated for Optimum Elasticity and Tool Life
- Coolant Thru the Center
- Dynamically Balanced for G2.5 @ 25,000 RPM or < 1 gmm
- Preset Screw included for 1/4” & larger for positive stop
- **Designed for Carbide Cutting Tools with h6 shank tolerance**

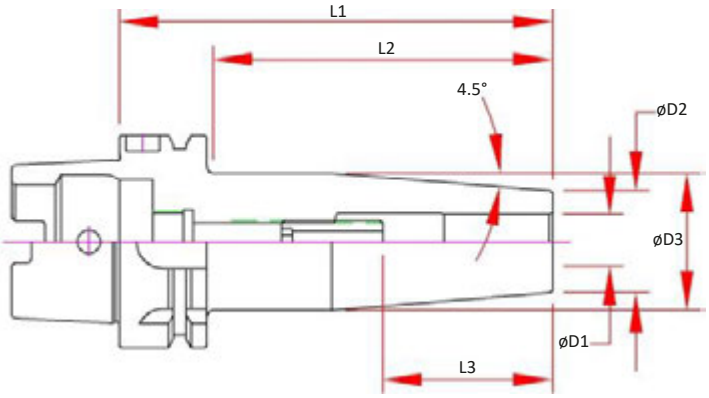

Optional (Order Separately):

- Jet-Blast Coolant Ports - Add “-J”
- Fine Trim Balance (Sample cutter required for balance compensation)


P-137

Note: 120mm, 130mm & 200mm in normally in stock in Germany

Part Number	D1 Bore	D2	D3	L1 Projection	L2	L3 Max Tool Enters	Preset Screw
HSK063A-SDM03-080	3.000	0.39	0.71	3.15	2.02	2.28	-
HSK063A-SDM03-160	3.000	0.39	0.75	6.30	5.16	5.43	-
HSK063A-SDM04-080	4.000	0.39	0.71	3.15	2.02	2.28	-
HSK063A-SDM04-160	4.000	0.39	0.75	6.30	5.16	5.43	-
HSK063A-SDM06-080	6.000	0.83	1.06	3.15	2.02	1.54	SCW-ASC-05-23
HSK063A-SDM06-160	6.000	0.83	1.06	6.30	5.16	1.54	SCW-ASC-05-23
HSK063A-SDM08-080	8.000	0.83	1.06	3.15	2.02	1.54	SCW-ASC-06-23
HSK063A-SDM08-160	8.000	0.83	1.06	6.30	5.16	1.54	SCW-ASC-06-23
HSK063A-SDM10-085	10.000	0.94	1.26	3.35	2.21	1.73	SCW-ASC-08-23
HSK063A-SDM10-160	10.000	0.94	1.26	6.30	5.16	1.73	SCW-ASC-08-23
HSK063A-SDM12-090	12.000	0.94	1.26	3.54	2.41	1.97	SCW-ASC-10-23
HSK063A-SDM12-160	12.000	0.94	1.26	6.30	5.16	1.97	SCW-ASC-10-23
HSK063A-SDM16-095	16.000	1.06	1.34	3.74	2.61	1.97	SCW-ASC-12-23
HSK063A-SDM16-160	16.000	1.06	1.34	6.30	5.16	1.97	SCW-ASC-12-23
HSK063A-SDM20-100	20.000	1.30	1.65	3.94	2.80	2.17	SCW-ASC-12-23
HSK063A-SDM20-160	20.000	1.30	1.65	6.30	5.16	2.17	SCW-ASC-12-23
HSK063A-SDM25-115	25.000	1.73	2.09	4.53	3.50	2.40	SCW-ASC-16-23
HSK063A-SDM25-160	25.000	1.73	2.09	6.30	5.16	2.40	SCW-ASC-16-23

HSK100A Shrink Fit - Inch

Features

- 3 µm - 0.0001" Runout Taper to Bore
- Manufactured from ISO-40CrMoV5 (H13) Material, Heat Treated for Optimum Elasticity and Tool Life
- Coolant Thru the Center
- Dynamically Balanced for G2.5 @ 25,000 RPM or < 1 gmm
- Preset Screw included for 1/4" & larger for positive stop
- **Designed for Carbide Cutting Tools with h6 shank tolerance**

Optional (Order Separately):

- Jet-Blast Coolant Ports - Add "-J"
- Fine Trim Balance (Sample cutter required for balance compensation)

P-137

Style – 1

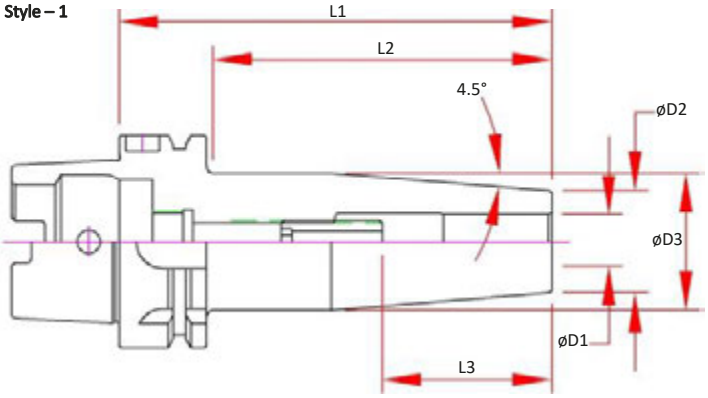

Style – 2

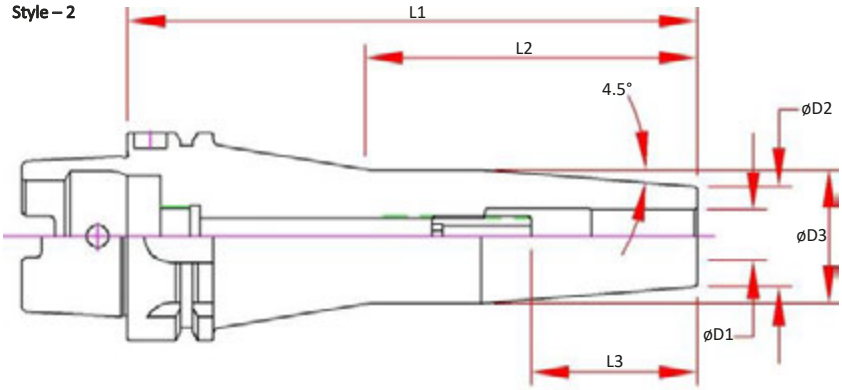

Part Number	D1 Bore	D2	D3	L1 Projection	L2	L3 Max Tool Enters	Preset Screw	Style
HSK100A-SD025-085	0.2500	0.83	1.06	3.35	1.91	1.46	SCW-ASC-05-23	1
HSK100A-SD025-160	0.2500	0.83	1.06	6.30	2.40	1.46	SCW-ASC-05-23	2
HSK100A-SD031-085	0.3125	0.83	1.06	3.35	1.91	1.46	SCW-ASC-06-23	1
HSK100A-SD031-160	0.3125	0.83	1.06	6.30	2.40	1.46	SCW-ASC-06-23	2
HSK100A-SD037-090	0.3750	0.94	1.24	3.54	2.20	1.65	SCW-ASC-08-23	1
HSK100A-SD037-160	0.3750	0.94	1.26	6.30	2.40	1.65	SCW-ASC-08-23	2
HSK100A-SD050-095	0.5000	0.94	1.26	3.74	2.40	1.89	SCW-ASC-10-23	1
HSK100A-SD050-160	0.5000	0.94	1.26	6.30	2.40	1.89	SCW-ASC-10-23	2
HSK100A-SD062-100	0.6250	1.06	1.34	3.94	2.60	2.01	SCW-ASC-12-23	1
HSK100A-SD062-160	0.6250	1.06	1.34	6.30	2.40	2.01	SCW-ASC-12-23	2
HSK100A-SD075-105	0.7500	1.30	1.61	4.13	2.80	2.09	SCW-ASC-12-23	1
HSK100A-SD075-160	0.7500	1.30	1.61	6.30	2.99	2.09	SCW-ASC-12-23	2
HSK100A-SD100-115	1.0000	1.73	2.09	4.53	3.19	2.32	SCW-ASC-16-23	1
HSK100A-SD100-160	1.0000	1.73	2.09	6.30	4.57	2.32	SCW-ASC-16-23	2
HSK100A-SD125-120	1.2500	1.73	2.09	4.72	3.39	2.48	SCW-ASC-16-23	1
HSK100A-SD125-160	1.2500	1.73	2.09	6.30	4.57	2.48	SCW-ASC-16-23	2

HSK100A Shrink Fit - Metric

Features

- 3 µm - 0.0001” Runout Taper to Bore
- Manufactured from ISO-40CrMoV5 (H13) Material, Heat Treated for Optimum Elasticity and Tool Life
- Coolant Thru the Center
- Dynamically Balanced for G2.5 @ 25,000 RPM or < 1 gmm
- Preset Screw included for 1/4” & larger for positive stop
- **Designed for Carbide Cutting Tools with h6 shank tolerance**

Optional (Order Separately):

- Jet-Blast Coolant Ports - Add “-J”
- Fine Trim Balance (Sample cutter required for balance compensation)

P-137

Style – 1

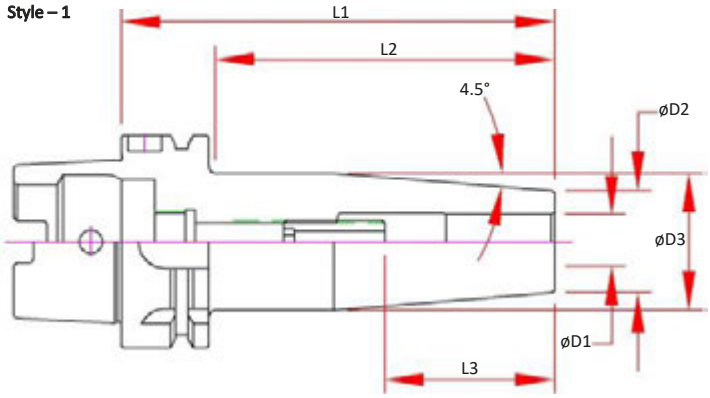

Style – 2

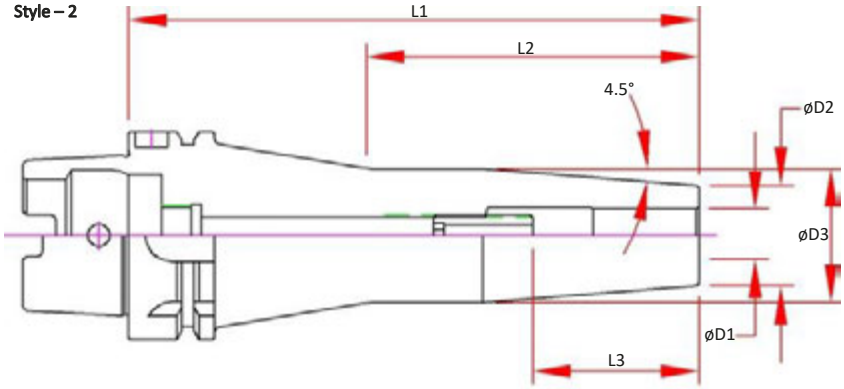

Note: 130mm & 200mm normally in stock in Germany

Part Number	D1 Bore	D2	D3	L1 Projection	L2	L3 Max Tool Enters	Preset Screw	Style
HSK100A-SDM06-085	6	21	27	85	51	37	SCW-ASC-05-23	1
HSK100A-SDM06-160	6	21	27	160	126	37	SCW-ASC-05-23	2
HSK100A-SDM08-085	8	21	27	85	51	37	SCW-ASC-06-23	1
HSK100A-SDM08-160	8	21	27	160	126	37	SCW-ASC-06-23	2
HSK100A-SDM10-090	10	24	32	90	56	42	SCW-ASC-08-23	1
HSK100A-SDM10-160	10	24	32	160	126	42	SCW-ASC-08-23	2
HSK100A-SDM12-095	12	24	32	95	61	48	SCW-ASC-10-23	1
HSK100A-SDM12-160	12	24	32	160	126	48	SCW-ASC-10-23	2
HSK100A-SDM16-100	16	27	34	100	66	51	SCW-ASC-12-23	1
HSK100A-SDM16-160	16	27	34	160	126	51	SCW-ASC-12-23	2
HSK100A-SDM20-105	20	33	42	105	71	53	SCW-ASC-12-23	1
HSK100A-SDM20-160	20	33	42	160	126	53	SCW-ASC-12-23	2
HSK100A-SDM25-115	25	44	53	115	81	59	SCW-ASC-16-23	1
HSK100A-SDM25-160	25	44	53	160	126	59	SCW-ASC-16-23	2
HSK100A-SDM32-120	32	44	53	120	86	63	SCW-ASC-16-23	1
HSK100A-SDM32-160	32	44	53	160	126	63	SCW-ASC-16-23	2

BT40 Shrink Fit - Inch

Features

- 3 µm - 0.0001" Runout Taper to Bore
- Manufactured from ISO-40CrMoV5 (H13) Material, Heat Treated for Optimum Elasticity and Tool Life
- Coolant Thru the Center
- Tapers are ground better than AT3 for optimal T.I.R.
- Dynamically Balanced for G2.5 @ 25,000 RPM or < 1 gmm
- Preset Screw included for 1/4" & larger for positive stop
- **Designed for Carbide Cutting Tools with h6 shank tolerance**

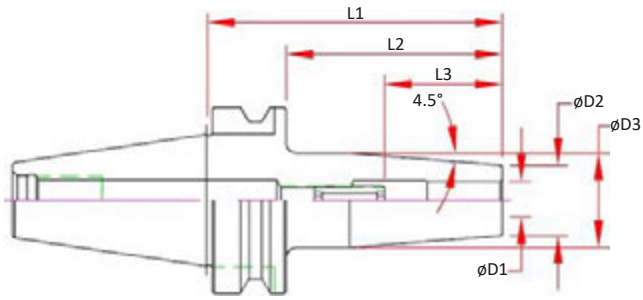

Optional (Order Separately):

- Jet-Blast Coolant Ports - Add "-J"
- DIN-B Coolant - Add "-D"
- Fine Trim Balance (Sample cutter required for balance compensation)


P-134

Part Number	D1 Bore	D2	D3	L1 Projection	L2	L3 Max Tool Enters	Preset Screw
BT40-SD012-090	0.1250	0.39	0.77	3.54	2.28	4.57	-
BT40-SD012-160	0.1250	0.39	0.77	6.30	5.43	7.73	-
BT40-SD018-090	0.1875	0.39	0.77	3.54	2.28	4.57	-
BT40-SD018-160	0.1875	0.39	0.77	6.30	5.43	7.73	-
BT40-SD025-090	0.2500	0.83	1.06	3.54	2.28	1.54	SCW-ASC-05-23
BT40-SD025-160	0.2500	0.83	1.06	6.30	5.43	1.54	SCW-ASC-05-23
BT40-SD031-090	0.3125	0.83	1.06	3.54	2.28	1.54	SCW-ASC-06-23
BT40-SD031-160	0.3125	0.83	1.06	6.30	5.43	1.54	SCW-ASC-06-23
BT40-SD037-090	0.3750	0.94	1.26	3.54	2.28	1.73	SCW-ASC-08-23
BT40-SD037-160	0.3750	0.94	1.26	6.30	5.43	1.73	SCW-ASC-08-23
BT40-SD050-090	0.5000	0.94	1.26	3.54	2.28	1.97	SCW-ASC-10-23
BT40-SD050-160	0.5000	0.94	1.26	6.30	5.43	1.97	SCW-ASC-10-23
BT40-SD062-090	0.6250	1.06	1.34	3.54	2.28	2.09	SCW-ASC-12-23
BT40-SD062-160	0.6250	1.06	1.34	6.30	5.43	2.09	SCW-ASC-12-23
BT40-SD075-090	0.7500	1.30	1.65	3.54	2.28	2.09	SCW-ASC-12-23
BT40-SD075-160	0.7500	1.30	1.65	6.30	5.43	2.09	SCW-ASC-12-23
BT40-SD100-100	1.0000	1.73	2.09	3.94	3.07	2.28	SCW-ASC-16-23
BT40-SD100-160	1.0000	1.73	2.09	6.30	5.43	2.28	SCW-ASC-16-23
BT40-SD125-100	1.2500	1.73	2.09	3.94	3.07	2.28	SCW-ASC-16-23
BT40-SD125-160	1.2500	1.73	2.09	6.30	5.43	2.28	SCW-ASC-16-23

BT40 Shrink Fit - Metric

Features

- 3 µm - 0.0001" Runout Taper to Bore
- Manufactured from ISO-40CrMoV5 (H13) Material, Heat Treated for Optimum Elasticity and Tool Life
- Coolant Thru the Center
- Tapers are ground better than AT3 for optimal T.I.R.
- Dynamically Balanced for G2.5 @ 25,000 RPM or < 1 gmm
- Preset Screw included for 1/4" & larger for positive stop
- **Designed for Carbide Cutting Tools with h6 shank tolerance**

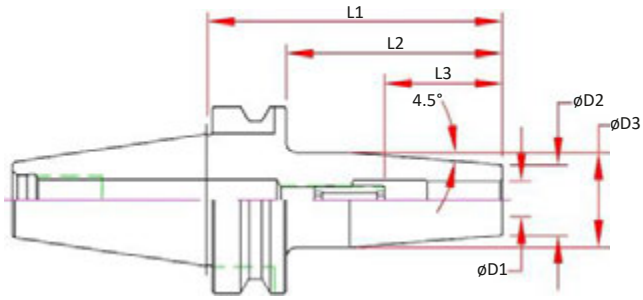

Optional (Order Separately):

- Jet-Blast Coolant Ports - Add "J"
- DIN-B Coolant - Add "D"
- Fine Trim Balance (Sample cutter required for balance compensation)


P-134

Part Number	D1 Bore	D2	D3	L1 Projection	L2	L3 Max Tool Enters	Preset Screw
BT40-SDM03-090	3.000	0.39	0.75	3.54	2.28	4.57	-
BT40-SDM03-160	3.000	0.39	0.75	6.30	5.43	7.73	-
BT40-SDM04-090	4.000	0.39	0.75	3.54	2.28	4.57	-
BT40-SDM04-160	4.000	0.39	0.75	6.30	5.43	7.73	-
BT40-SDM06-090	6.000	0.83	1.06	3.54	2.28	1.54	SCW-ASC-05-23
BT40-SDM06-160	6.000	0.83	1.06	6.30	5.43	1.54	SCW-ASC-05-23
BT40-SDM08-090	8.000	0.83	1.06	3.54	2.28	1.54	SCW-ASC-06-23
BT40-SDM08-160	8.000	0.83	1.06	6.30	5.43	1.54	SCW-ASC-06-23
BT40-SDM10-090	10.000	0.94	1.26	3.54	2.28	1.73	SCW-ASC-08-23
BT40-SDM10-160	10.000	0.94	1.26	6.30	5.43	1.73	SCW-ASC-08-23
BT40-SDM12-090	12.000	0.94	1.26	3.54	2.28	1.97	SCW-ASC-10-23
BT40-SDM12-160	12.000	0.94	1.26	6.30	5.43	1.97	SCW-ASC-10-23
BT40-SDM16-090	16.000	1.06	1.34	3.54	2.28	1.97	SCW-ASC-12-23
BT40-SDM16-160	16.000	1.06	1.34	6.30	5.43	1.97	SCW-ASC-12-23
BT40-SDM20-090	20.000	1.30	1.65	3.54	2.28	2.17	SCW-ASC-12-23
BT40-SDM20-160	20.000	1.30	1.65	6.30	5.43	2.17	SCW-ASC-12-23

BT30 Dual Contact Shrink Fit - Inch

Features

- 3 µm - 0.0001" Runout Taper to Bore
- Manufactured from ISO-40CrMoV5 (H13) Material, Heat Treated for Optimum Elasticity and Tool Life
- Coolant Thru the Center
- Tapers are ground better than AT3 for optimal T.I.R.
- Dynamically Balanced for G2.5 @ 25,000 RPM or < 1 gmm
- Preset Screw included for 1/4" & larger for positive stop
- **Designed for Carbide Cutting Tools with h6 shank tolerance**

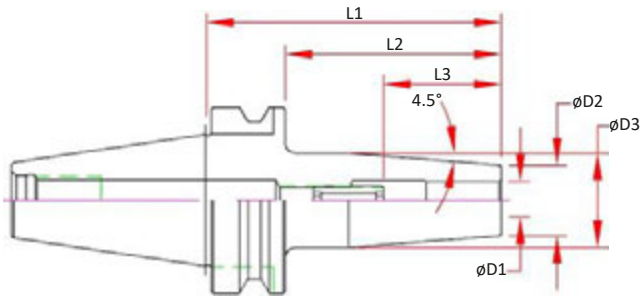

Optional (Order Separately):

- Jet-Blast Coolant Ports - Add "J"
- Fine Trim Balance (Sample cutter required for balance compensation)


P-134

Dual Contact Spindle Part Number	D1 Bore	D2	D3	L1 Projection	L2	L3 Max Tool Enters	Preset Screw
BT30-SD012-080-B	0.1250	0.39	0.77	3.15	2.17	3.72	-
BT30-SD018-080-B	0.1875	0.39	0.77	3.15	2.17	3.72	-
BT30-SD025-080-B	0.2500	0.83	1.06	3.15	2.17	1.54	SCW-ASC-05-23
BT30-SD031-080-B	0.3125	0.83	1.06	3.15	2.17	1.54	SCW-ASC-06-23
BT30-SD037-080-B	0.3750	0.94	1.26	3.15	2.17	1.73	SCW-ASC-08-23
BT30-SD050-080-B	0.5000	0.94	1.26	3.15	2.17	1.97	SCW-ASC-10-23
BT30-SD062-080-B	0.6250	1.06	1.34	3.15	2.17	2.09	SCW-ASC-12-23
BT30-SD075-090-B	0.7500	1.30	1.65	3.54	2.56	2.09	SCW-ASC-12-23

SD - Shrink Fit Extensions - Metric

Features:

- 3 µm - 0.0001" Runout
- Coolant Thru the Center
- Close Center to clear fixtures or part walls
- Manufactured from ISO-40CrMoV5 (H13) Material,
  Heat Treated for Optimum Elasticity and Tool Life
- **Designed for Carbide Cutting Tools with h6 shank tolerance**

Optional (Order Separately):

- Jet-Blast Coolant Ports - Add "J"
  Note: Due to the thin wall Jet-Blast Ports may be into the bore of the extension.

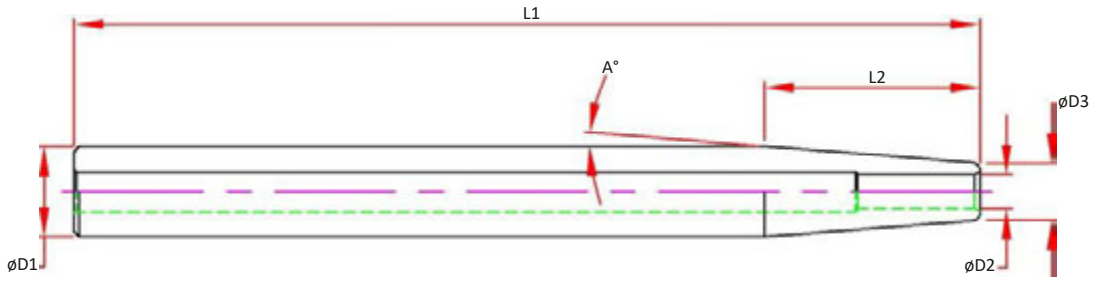

Part Number	D1 Shank mm	D2 Bore mm	D3 Nose mm	L1 Length mm	L2 Nose mm	A Angle
S12-SD03-160	12	3	8	160	25.4	4.5°
S12-SD04-160	12	4	8	160	25.4	4.5°
S16-SD03-160	16	3	10	160	38.1	4.5°
S16-SD04-160	16	4	10	160	38.1	4.5°
S16-SD05-160	16	5	10	160	38.1	4.5°
S16-SN06-140	16	6	9	140	67	3°
S16-SD06-160	16	6	10	160	38.1	4.5°
S20-SD06-160	20	6	14	160	38.1	4.5°
S20-SD06-300	20	6	14	300	38.1	4.5°
S20-SD08-160	20	8	14	160	38.1	4.5°
S20-SD08-300	20	8	14	300	38.1	4.5°
S25-SD10-160	25	10	20	160	31.8	4.5°
S25-SD10-300	25	10	20	300	31.8	4.5°
S25-SD12-160	25	12	20	160	31.8	4.5°
S25-SD12-300	25	12	20	300	31.8	4.5°
S25-SD14-160	25	14	20	160	31.8	4.5°
S25-SD16-160	25	16	22	160	19.1	4.5°
S25-SD16-300	25	16	22	300	19.1	4.5°

SD - Shrink Fit Extensions - Inch

Features:

- 3 µm - 0.0001" Runout
- Coolant Thru the Center
- Close Center to clear fixtures or part walls
- Manufactured from ISO-40CrMoV5 (H13) Material,
  Heat Treated for Optimum Elasticity and Tool Life
- **Designed for Carbide Cutting Tools with h6 shank tolerance**

Optional (Order Separately):

- Jet-Blast Coolant Ports - Add "J"
  Note: Due to the thin wall Jet-Blast Ports may be into the bore of the extension.

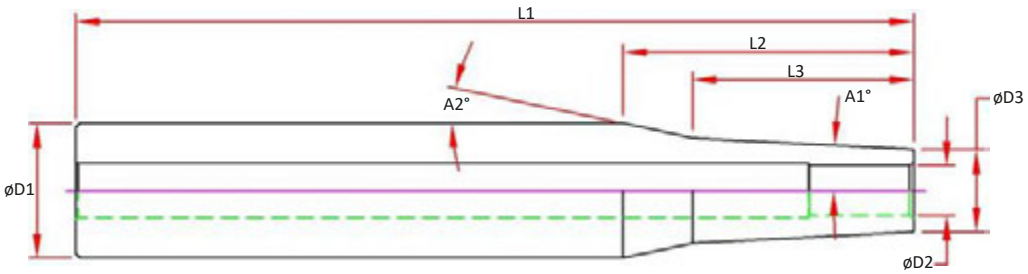

Part Number	D1	D2	D3	L1	L2	L3	A1	A2
S075-SD025-0415	0.7500	0.2500	0.49	4.15	1.38	0.87	3.0°	9.4°
S075-SD031-0415	0.7500	0.3125	0.55	4.15	1.38	0.87	3.0°	6.1°
S075-SD037-0415	0.7500	0.3750	0.61	4.15	-	1.37	3.0°	-
S100-SD025-0800	1.0000	0.2500	0.49	8.00	2.17	1.65	3.0°	17.9°
S100-SD031–0800	1.0000	0.3125	0.55	8.00	2.17	1.65	3.0°	14.9°
S100-SD037–0800	1.0000	0.3750	0.61	8.00	2.17	1.65	3.0°	11.8°
S100-SD050–0800	1.0000	0.5000	0.81	8.00	1.71	1.43	2.5°	6.5°

SN - Shrink Fit Slim Nose Extensions

Features:

- 3 µm - 0.0001" Runout
- Coolant Thru the Center
- Close Center to clear fixtures or part walls
- Manufactured from ISO-40CrMoV5 (H13) Material, Heat Treated for Optimum Elasticity and Tool Life
- **Designed for Carbide Cutting Tools with h6 shank tolerance**

Optional (Order Separately):

- Jet-Blast Coolant Ports - Add "J"
  Note: Due to the thin wall Jet-Blast Ports may be into the bore of the extension.

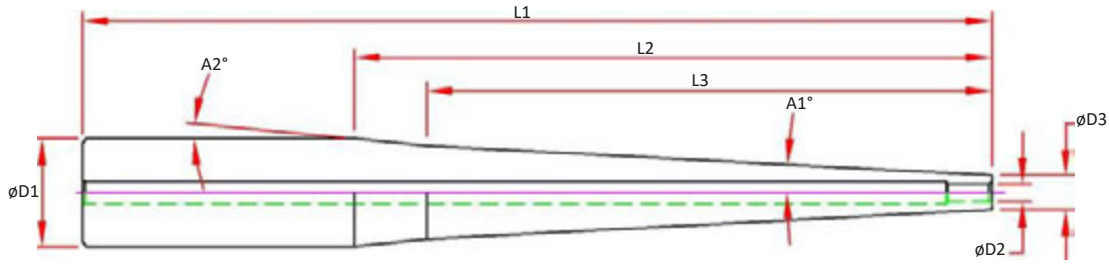

Part Number	D1	D2	D3	L1	L2	L3	A1	A2
S037-SN012-0315	0.3750	0.1250	0.24	3.15	1.40	-	2.8°	-
S037-SN018-0315		0.1875	0.31				1.5°	
S050-SN025–0315	0.5000	0.2500	0.37				2.8°	
S075-SN012–0800	0.7500	0.1250	0.24	8.00	4.46	3.95	3.0°	5.4°
S075-SN018–0800		0.1875	0.31	8.00	4.46	-	2.9°	-
S075-SN025-0433		0.2500	0.37	4.33	1.38	25.6	3.0°	20.2°
S075-SN025–0800		0.2500	0.37	8.00	4.46	-	2.5°	-
S075-SN031-0433		0.3125	0.43	4.33	1.38	1.00	3.0°	16.1°
S075-SN037-0433		0.3750	0.49	4.33	1.38	1.00	3.0°	11.8°
S100-SN037–0800	1.0000	0.3750	0.49	8.00	4.33	3.82	3.0°	6.0°
S100-SN050-0610		0.5000	0.62	6.10	2.00	1.63	2.9°	16.1°
S100-SN050-0800		0.5000	0.62	8.00	4.33	3.82	2.0°	6.0°

Part Number	D1 mm	D2 mm	D3 mm	L1 mm	L2	L3	A1	A2
S10-SN04-080	10	4	8	80	-	35	1.5°	-
S16-SN06-140	16	6	10	140	-	67	3°	-
S20-SN06-200	20	6	10	200	-	113	2.5°	-
S25-SN10-200	25	10	12.1	200	110	97	3°	6°

ez Shrink System

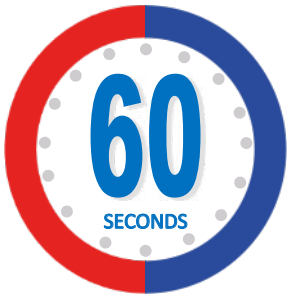

EZ-SHRINK-EZ3K-KIT

3kw, 1/8-3/4 Capacity, 220V, 20A Single Phase

User adjustable settings.

Includes:

- EZ Shrink Machine
- Optional 32mm Coil for tooling up to 1-1/4”
- (2) Bases
- (1) Cutting Tool Tray
- (1) Pair of Gloves
- 12”W x 17.5”D x 31”H

•Max tool projection over cutter is 12.5” from holder gage line with base installed , base height is 6.5”.

EZ-COOL-EZ3W-KIT

2 Station, 110V, 16A

Includes:

- EZ Cooling Machine
- (1) Hose Kit
- (1) Cooling Adapter
- 16.5”W x 21.88”D x 23”H
- Coolant Tank Capacity = 5 Gallons
- Anti-Rust additive recommended

Part Number	Includes
EZ-SHRINK-EZ3K	Machine Only
EZ-SHRINK-EZ3K-KIT-40	Machine, (2) Base-T40, Gloves, Tool Tray
EZ-SHRINK-EZ3K-KIT-50	Machine, (2) Base-T50, Gloves, Tool Tray
EZ-SHRINK-EZ3K-KIT-63A	Machine, (2) Base-HSK63A, Gloves, Tool Tray
EZ-SHRINK-EZ3K-KIT-100A	Machine, (2) Base-HSK100A, Gloves, Tool Tray

Part Number	Includes
EZ-COOL-EZ3W	Unit Only
EZ-COOL-EZ3W-KIT	Base, Adapter & Hose
EZ-COOL-ADAPTER	Cooling Adapter to fit Base
EZ-COOL-HOSE	Hose & 2 Hose Clamps

Proper cooling is the key to preventing over heating of the tool holders and long life of the H13 tool steel. EZ Cool units uses your shop coolant to returns the holder to a safe to handle temperature in 30 seconds.

EZ Shrink Machine is a 3kw, 30 second unit that functions with 1/8-3/4 (3mm-20mm) cutter shanks (carbide only).
Pre-programmed and user adjustable EZ Shrink is simple and effective.

EZ-BASE

Tapered Shank Bases
For use with EZ3K & EZ3W

Base Height = 6.5”

Part Number	Shank Size
EZ-BASE-T30	BT30, CAT30, ISO30, SK30
EZ-BASE-T40	BT40, CAT40, ISO40, SK40
EZ-BASE-T50	BT50, CAT50, ISO50, SK50
EZ-BASE-HSK032A	HSK32A, C & E
EZ-BASE-HSK040A	HSK40A, C, E, HSK50F
EZ-BASE-HSK050A	HSK50A, C, E, HSK63F
EZ-BASE-HSK063A	HSK63A, C, E, HSK80F
EZ-BASE-HSK100A	HSK100A, C, E

EZ-BASE-S

Straight Shank Adapters
*EZ-ROUND-TRAY is required to locate any EZ-BASE-S*** (Order Separately)

Part Number	Shank Size
EZ-BASE-S037	3/8"
EZ-BASE-S050	1/2"
EZ-BASE-S075	3/4"
EZ-BASE-S100	1"
EZ-BASE-S10	10mm
EZ-BASE-S12	12mm
EZ-BASE-S16	16mm
EZ-BASE-S20	20mm
EZ-BASE-S25	25mm
EZ-BASE-S32	32mm

EZ-COOL-EXT

Spacer to increase height for extended length holders in the EZ-COOL-EZ3W

Part Number	Description
EZ-COOL-EXT	Extension for Longer Tools

EZ-ROUND-TRAY

For storage of the cutting tools

Part Number	Description
EZ-ROUND-TRAY	Cutting Tool Holder

EZ-GLOVE

Safety Gloves

Part Number	Description
EZ-GLOVE	Protective Gloves

EZ3K-32MM-COIL

Increases Capacity to 32mm (1-1/4”)
For 1/2”-1/1/4 Tool Shanks

See manual for installation and programming

Part Number	Description
EZ-SHRINK-EZ3K COIL 32MM	12MM-32MM Expansion Coil

EZ-TABLE

- Dimensions: 48" W x 24" D x 39" H
- Polyurethane coated solid wooden top (48" x 24" x 1.5" thick)
- 2 solid steel drawers with ball bearing sliders; 4 wheels (2 locking)
- Steel frame in graphite finish

Part Number	Size
EZ-TABLE	48" W x 24" D x 39" H

MC Mill Chuck—Best in Class

- 0.0002” TIR Guaranteed @ 4D or up to 100mm
- 5X the driving torque than ER on nominal sizes, over 600 ft/lbs of radial torque on 1.25” Carbide shanks
- 20% Higher grip force than competitive models
- Unlike materials & bearings & mass dampen cutting harmonics
- Designed for Performance Milling with Neutral flute geometry, not designed for hi-helix applications
- Reducing sleeves down to 1/8”
  Note: Using reducing sleeves also reduces holding power by 6X

Ultra-low Temperature Treatment

Sub-zero temperature treatment at –100ºC to remove the residual austenite from the holder which provides increased durability and long lasting performance.

Ultimate Precision 0.0002” @ 100mm

Runout at the end of the 1-1/4” tool 4” from the chuck face is within 0.0002” TIR, that is 8” from the spindle!

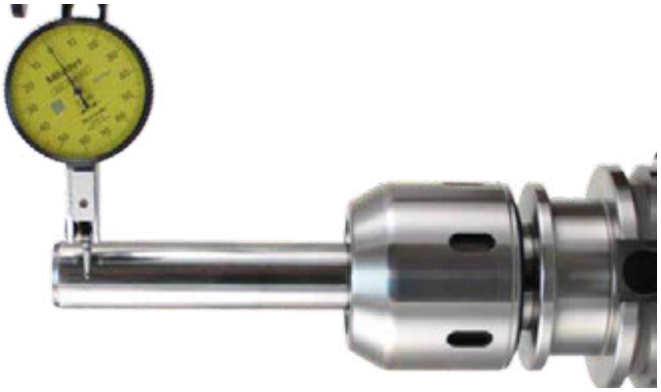

Coolant Cap Sealing System for MC Collets

Pioneer Coolant Cap Seals create a positive seal against the face of the Mill Chuck body and the shank of the cutting tool. The system utilizes a standard MC collet, a coolant cap that matches the collet ID, and a coolant cap nut.

- **Low Cost** - Uses standard MC collets
- **Replaceable Seals** - Utilizes standard O-rings for easy low cost replacement
- Works with all MC Collets, **will not fit BC Mill Chucks.**

1. MC Collet, MCN Nut & MCC Cap Required, Cap must match cutter shank diameter.
2. Insert a cutting tool into the MCC Cap.
3. Insert the MC collet into the MCN Nut.
4. Insert the cutting tool into the collet, thread the MCC Cap into the MCN Nut.
5. Tighten Cap.
6. Insert the assembly into the Mill Chuck & Tighten fully.

MC Coolant Cap

- Works with all MC Collets, **will not fit BC Mill Chucks**
- Requires (1) MCN Nut and (1) MCC Cap
- Order Cap to match MC Collet ID Size

Nut Part Number	Collet Size	Cap Part Number	Available Sizes
MCN075	MC075	MCC075-	1/8, 3/16, 1/4, 5/16, 3/8, 7/16, 1/2, 9/16, 5/8
MCN100	MC100	MCC100-	1/8, 3/16, 1/4, 5/16, 3/8, 7/16, 1/2, 9/16, 5/8, 3/4, 7/8
MCN125	MC125	MCC125-	1/8, 3/16, 1/4, 5/16, 3/8, 7/16, 1/2, 9/16, 5/8, 3/4, 7/8, 1”
MCN075	MC075	MCC075-	6, 8, 10, 12, 14, 16
MCN100	MC100	MCC100-	6, 8, 10, 12, 14, 16, 18, 20
MCN125	MC125	MCC125-	6, 8, 10, 12, 14, 16, 18, 20, 22, 25

CAT40 Mill Chucks

Features

- 5 µm - 0.0002" Runout @ 4 x Cutter Shank Dia.
- Designed for Tool Shanks w/ ISO h6 Class Tolerance
- Pre-Balanced for use @ 20,000 RPM
- Tapers are ground better than AT3 for optimal T.I.R.

Optional (Order Separately):

- Wrench
- Nylon Screw Seal for short tool shanks
- DIN-B Flange Coolant
- Fine Trim Balance
  (Sample cutter required for balance compensation)

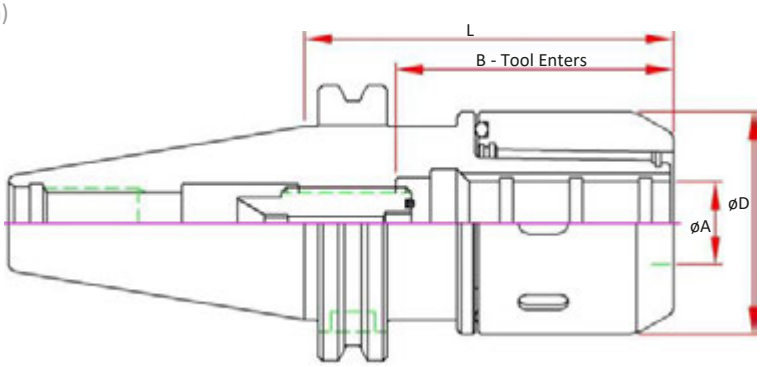

Part Number	A Bore	B Max. Tool Enters	D	L Projection	Preset Screw	Collet	Wrench
CAT40-MC075-0276	0.7500	2.76	2.09	2.76	ASC-16-40	MC075	50-55 HOOK
CAT40-MC075-0335				3.35			
CAT40-MC075-0472				4.72			
CAT40-MC075-0591				5.91			
CAT40-MC100-0335	1.0000	2.91	2.44	3.35	ASC-16-40	MC100	58-65 HOOK
CAT40-MC100-0374				3.74			
CAT40-MC100-0413				4.13			
CAT40-MC100-0591				5.91			
CAT40-MC125-0354 *	1.2500	3.07	2.76	3.54	ASC-16-40	MC125	65-70 HOOK
CAT40-MC125-0413				4.13			
CAT40-MC125-0472				4.72			
CAT40-MC125-0591				5.91			

* No ANSI Safety Area - will not function in umbrella style tool changers

CAT50 Mill Chucks

Features

- 5 µm - 0.0002" Runout @ 4 x Cutter Shank Dia.
- Designed for Tool Shanks w/ ISO h6 Class Tolerance
- Tapers are ground better than AT3 for optimal T.I.R.
- Pre-Balanced for use @ 15,000 RPM

Optional (Order Separately):

- Wrench
- Nylon Screw Seal for short tool shanks
- DIN-B Flange Coolant
- Fine Trim Balance
  (Sample cutter required for balance compensation)

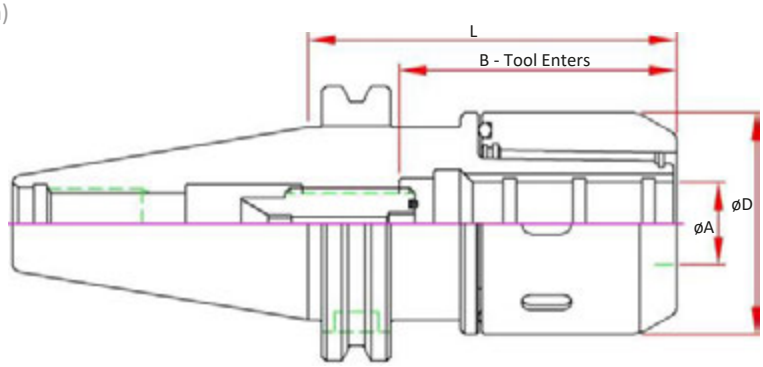

Part Number	A Bore	B Max. Tool Enters	D	L Projection	Preset Screw	Collet	Wrench
CAT50-MC075-0354	0.7500	2.76	2.09	3.54	ASC-16-40	MC075	50-55 HOOK
CAT50-MC075-0413				4.13			
CAT50-MC075-0531				5.31			
CAT50-MC075-0650				6.50			
CAT50-MC100-0315	1.0000	2.95	2.44	3.15	ASC-16-40	MC100	58-65 HOOK
CAT50-MC100-0354				3.54			
CAT50-MC100-0413				4.13			
CAT50-MC100-0531				5.31			
CAT50-MC100-0650				6.50			
CAT50-MC125-0354	1.2500	3.23	2.76	3.54	ASC-16-40	MC125	65-70 HOOK
CAT50-MC125-0413				4.13			
CAT50-MC125-0531				5.31			
CAT50-MC125-0650				6.50			

BT30 Mill Chucks

Features

- 5 µm - 0.0002" Runout @ 4 x Cutter Shank Dia.
- Designed for Tool Shanks w/ ISO h6 Class Tolerance
- Tapers are ground better than AT3 for optimal T.I.R.
- Pre-Balanced for use @ 20,000 RPM

Optional (Order Separately):

- Wrench
- Nylon Screw Seal for short tool shanks
- DIN-B Flange Coolant
- Fine Trim Balance
  (Sample cutter required for balance compensation)

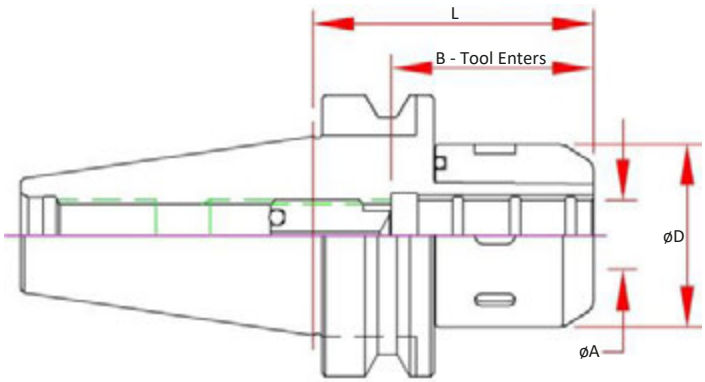

Part Number	A Bore	B Max. Tool Enters	D	L Projection	Preset Screw	Collet	Wrench
BT30-MC075-0315	0.7500	2.76	2.09	3.15	ASC-12-30	MC075	50-55 HOOK
BT30-MC075-0335				3.35			
BT30-MC20-080	20mm			3.15		MC20	

BT40 Mill Chucks

Features

- 5 µm - 0.0002" Runout @ 4 x Cutter Shank Dia.
- Designed for Tool Shanks w/ ISO h6 Class Tolerance
- Tapers are ground better than AT3 for optimal T.I.R.
- Pre-Balanced for use @ 20,000 RPM

Optional (Order Separately):

- Wrench
- Nylon Screw Seal for short tool shanks
- DIN-B Flange Coolant
- Fine Trim Balance
  (Sample cutter required for balance compensation)

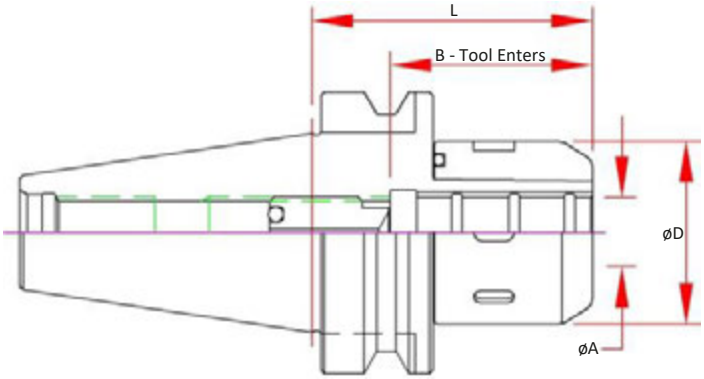

Part Number	A Bore	B Max. Tool Enters	D	L Projection	Preset Screw	Collet	Wrench
BT40-MC075-0295	0.7500	2.76	2.09	2.95	ASC-16-40	MC075	50-55 HOOK
BT40-MC075-0472				4.72			
BT40-MC100-0315	1.0000	2.91	2.44	3.15	ASC-16-40	MC100	58-65 HOOK
BT40-MC100-0335				3.35			
BT40-MC100-0472				4.72			
BT40-MC125-0335	1.2500	3.07	2.76	3.35	ASC-16-40	MC125	65-70 HOOK
BT40-MC125-0354				3.54			
BT40-MC125-0472				4.72			

HSK-A Mill Chuck

Features

- 5 µm - 0.0002" Runout @ 4 x Cutter Shank Dia.
- Designed for Tool Shanks w/ ISO h6 Class Tolerance
- Pre-Balanced for use @ 20,000 RPM

Optional (Order Separately):

- Wrench
- Nylon Screw Seal for short tool shanks
- Fine Trim Balance
  (Sample cutter required for balance compensation)

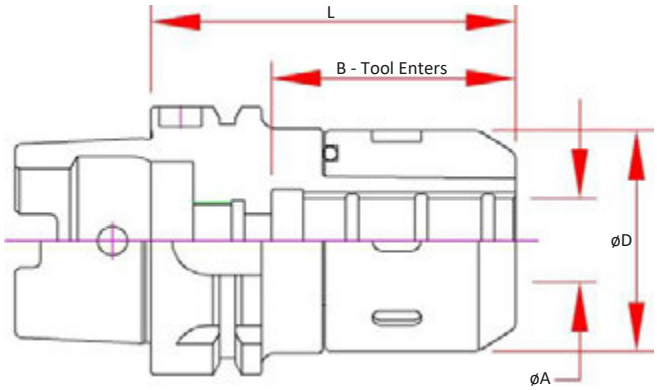

HSK63A

	Part Number	A Bore	B Max. Tool Enters	D	L Projection	Preset Screw	Collet	Wrench
3/4	HSK063A-MC075-0374	0.7500	2.36	2.09	3.74	-	MC075	50-55 HOOK
3/4	HSK063A-MC075-0433	0.7500	2.36	2.09	4.33	ASC-16-18	MC075	50-55 HOOK
1"	HSK063A-MC100-0394	1.0000	2.40	2.44	3.94	-	MC100	58-65 HOOK
1"	HSK063A-MC100-0472	1.0000	2.40	2.44	4.72	ASC-16-18	MC100	58-65 HOOK
1-1/4	HSK063A-MC125-0394	1.2500	2.99	2.76	3.94	-	MC125	65-70 HOOK
1-1/4	HSK063A-MC125-0472	1.2500	2.99	2.76	4.72	ASC-16-18	MC125	65-70 HOOK
20mm	HSK063A-MC20-110	20.000	2.36	2.09	4.33	ASC-16-18	MC20	50-55 HOOK
32mm	HSK063A-MC32-120	32.000	2.99	2.76	4.72	ASC-16-18	MC32	65-70 HOOK

HSK100A

	Part Number	A Bore	B Max. Tool Enters	D	L Projection	Preset Screw	Collet	Wrench
3/4	HSK100A-MC075-0453	0.7500	2.52	2.09	4.53	ASC-16-18	MC075	50-55 HOOK
1"	HSK100A-MC100-0512	1.0000	2.40	2.44	5.12	ASC-16-18	MC100	58-65 HOOK
1-1/4	HSK100A-MC125-0531	1.2500	3.07	2.76	5.31	ASC-16-18	MC125	65-70 HOOK
20mm	HSK100A-MC20-115	20.000	2.52	2.09	4.53	ASC-16-18	MC20	50-55 HOOK
32mm	HSK100A-MC32-135	32.000	3.07	2.76	5.31	ASC-16-18	MC32	65-70 HOOK

Mill Chuck Operation

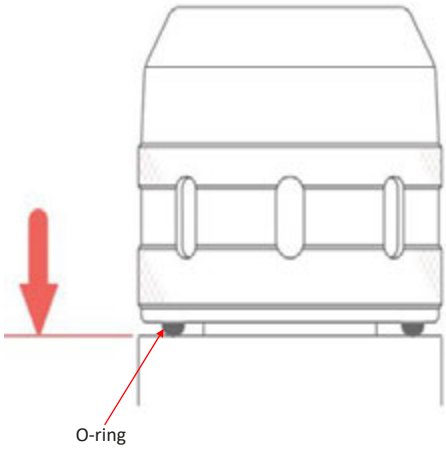

1. Cutting tools must have an ISO shank tolerance of h6 (0 / -0.0005”).
2. It is strongly recommended that the cutting tools have a straight cylindrical shanks to optimize performance. Reducing sleeves (collets) should not be used if possible because holding power is reduced 2-6X using reducing sleeves. Mill Chucks are designed for direct drive without a reducing sleeve (collet). For best performance keep flats on the cutting tools to a minimum.
3. Clean the ID of the Chuck, ID and OD of the Collet and the OD of the tool shank
4. Firmly hold the mill chuck with a tool fixture. Insert the collet or cutter shank into the ID of the MC Chuck, for proper holding the round part of the cutting shank must engage the complete bore depth. When using reducing sleeves (collets)
   verify the round portion of the cutting tool shank enters the complete length of the collet bore.
5. Tighten the nut using the proper wrench. Tighten the nut all the way down until the O-ring located at the bottom of the nut touches the flange of the body.
   Note: The nut hitting the shoulder will cause additional TIR. See Step 6.
6. Back off 1/8 - 1/4 turn for semi-finishing and finishing applications, TIR is restored the holder is back to where it was ground.
7. DO NOT tighten the mill chuck without a cutting tool shank inserted. This may cause damage to the mill chuck, or loss of performance.
8. DO NOT tighten past the O-ring touching the body. Over tightening does not increase pressure and damages the bearings in the nut.
9. When changing tools and storing mill chucks it is important to loosen the mill chuck nut completely and disengage the nut until is spins freely. This allows the bearing to return to the home position.
10. If there is noticeable corrosion or wear on the mill chuck ID, taper of the shank, or excessive unsmooth feeling when tightening or loosening the mill chuck nut, please stop using the mill chuck and contact your local service center.

Due to the tolerance variance of the cutter shanks and pressure required a tightening torque value is not supplied. The procedure above if followed will allow the holder to operate for many years without issue.

MC - Milling Chuck Collets

MC Collets are Straight Sleeves that allow you to expand the capabilities of your Mill Chuck.

- Collets Ground 3µm - 0.0001" Runout OD to ID
- Interchangeable with most competitive models
- On Size
  Designed for h6 tolerance cutting tool shanks

Note: Mill Chuck Collets reduce the grip force of the Mill Chuck.
Use caution to prevent cutter slip / pull out.

Cutter Shank Size		MC075
1/8	0.1250	MC075-0125
3/16	0.1875	MC075-0187
1/4	0.2500	MC075-0250
5/16	0.3125	MC075-0312
3/8	0.3750	MC075-0375
7/16	0.4375	MC075-0437
1/2	0.5000	MC075-0500
9/16	0.5625	MC075-0562
5/8	0.6250	MC075-0625
6mm	0.2362	MC075-M060
8mm	0.3150	MC075-M080
10mm	0.3937	MC075-M100
12mm	0.4724	MC075-M120
14mm	0.5512	MC075-M140
16mm	0.6299	MC075-M160

Cutter Shank Size		MC100
1/8	0.1250	MC100-0125
3/16	0.1875	MC100-0187
1/4	0.2500	MC100-0250
5/16	0.3125	MC100-0312
3/8	0.3750	MC100-0375
7/16	0.4375	MC100-0437
1/2	0.5000	MC100-0500
9/16	0.5625	MC100-0562
5/8	0.6250	MC100-0625
3/4	0.7500	MC100-0750
7/8	0.8750	MC100-0875
6mm	0.2362	MC100-M060
8mm	0.3150	MC100-M080
10mm	0.3937	MC100-M100
12mm	0.4724	MC100-M120
16mm	0.6299	MC100-M160
20mm	0.7874	MC100-M200

Cutter Shank Size		MC125
1/8	0.1250	MC125-0125
3/16	0.1875	MC125-0187
1/4	0.2500	MC125-0250
5/16	0.3125	MC125-0312
3/8	0.3750	MC125-0375
7/16	0.4375	MC125-0437
1/2	0.5000	MC125-0500
9/16	0.5625	MC125-0562
5/8	0.6250	MC125-0625
3/4	0.7500	MC125-0750
7/8	0.8750	MC125-0875
1	1.0000	MC125-1000
6mm	0.2362	MC125-M060
8mm	0.3150	MC125-M080
10mm	0.3937	MC125-M100
12mm	0.4724	MC125-M120
16mm	0.6299	MC125-M160
18mm	0.7087	MC125-M180
20mm	0.7874	MC125-M200
22mm	0.8661	MC125-M220
25mm	0.9843	MC125-M250

Collet Sets

MC Collets are Straight Sleeves that allow you to expand the capabilities of your Mill Chuck.

- Interchangeable with most competitive models
- Designed for h6 tolerance cutting tool shanks
- Collet Tray Included

Part Number	Collet Size	Pieces	Includes
MC075-ISET	MC075	9	1/8, 3/16, 1/4, 5/16, 3/8, 7/16, 1/2, 9/16, 5/8
MC100-ISET	MC100	11	1/8, 3/16, 1/4, 5/16, 3/8, 7/16, 1/2, 9/16, 5/8, 3/4, 7/8
MC125-ISET	MC125	12	1/8, 3/16, 1/4, 5/16, 3/8, 7/16, 1/2, 9/16, 5/8, 3/4, 7/8, 1”

Preset Screws

- Nylon Coolant Screw w/ O-Ring Standard

Part Number	Description	Hole	O-Ring	Thread	Length	Wrench
ASC-16-40	MC20, 25, 32, 075, 100 & 125 Nylon Coolant	2.50	11mm OD x 2.0mm	M16 x 2.00	40	2.5mm & 5.0mm Hex
ASC-12-30	BT30 - MC20 & MC075 Nylon Coolant	2.50	10mm OD x 1.5mm	M12 x 1.75	30	2.5mm & 5.0mm Hex
ASC-16-18	HSK - MC20, 25, 32, 075, 100 & 125 Nylon Coolant	2.50	11mm OD x 2.0mm	M16 x 2.00	18	2.5mm & 5.0mm Hex

Performance ER System

Clamping Range : 0.020” - 1.000”

* Holders Ground 0.0001” TIR or Less
* All Holders Dynamically Balanced,
  Nuts also Dynamically Balanced Individually,
  not Paired to the Holder
* Coolant Thru with Coolant Collets Available
  or Coolant Cap System
* Collet Options down to 2 Micron TIR Guaranteed!
* Holders Meet & Exceed all DIN Standards
* ID Chip Hole Standard

Mini Holders for Tight Applications

ER Mini holders are designed to provide additional clearance for close wall applications.

Available in ER11M & ER16M in CAT40 & BT30.
ER08M, ER11M, ER16M & ER20M in Straight Extensions.

True Dynamic Balance

PIONEER ER holder bodies and collet nuts are individually dynamically balanced, not in sets, for maximum flexibility and balance compensation.

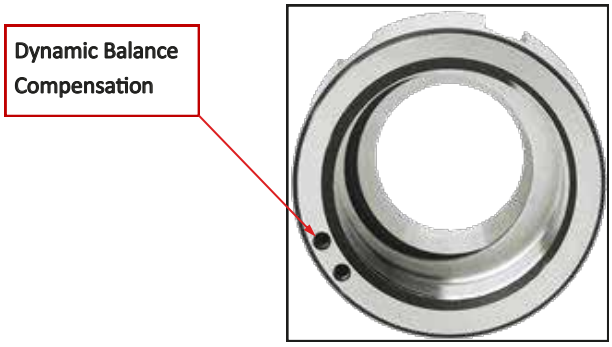

Standard Features

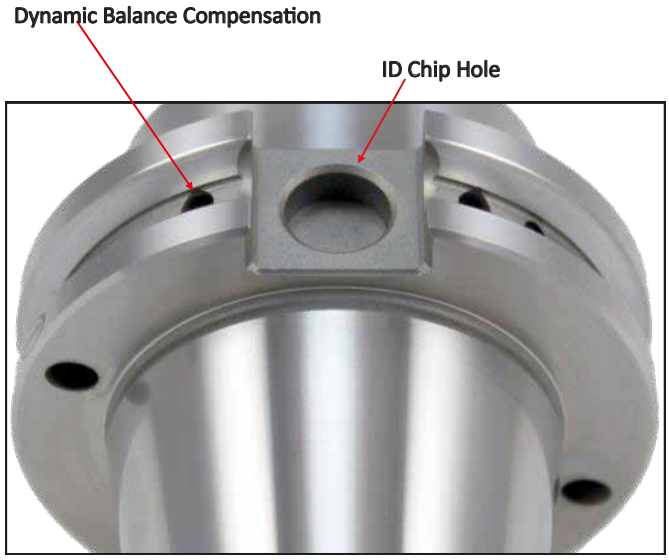

Sealed or Jet-Blast Coolant Cap

Seal Collets or ER Coolant Caps provide a coolant seal up to 1,500 PSI. Coolant Caps prevent chips & debris from entering the collet and chuck. Available in a Jet-Blast model for directional coolant into the cutter flutes.

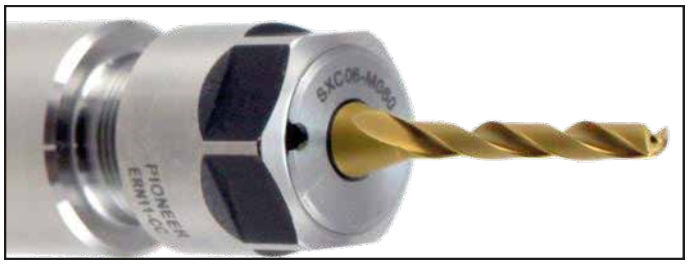

High Performance Bearing Nuts

Double your grip force
without increasing your locking pressure.

Bearing transfers torque more efficiently with ER collets allowing higher grip forces without increasing locking torque.

For best performance use ER collets with our bearing nuts!

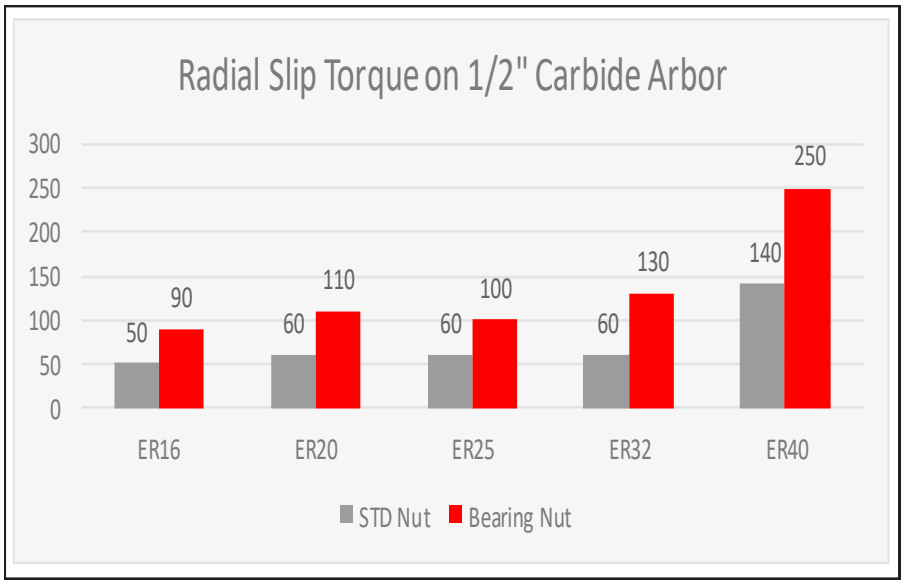

ER32 standard nut locked at 100 ft/lbs using a 1/2" carbide test arbor, the arbor slips at 60 ft/lbs of radial torque, using a Pioneer Bearing Nut the arbor slipped at 130 ft/lbs of radial toque. The average improvement on ER16 thru ER40 was 75% to 125% increase in radial holding power.

Note: Cutter size, material and finish may effect results. Recommend on-size collets when available.

Available sizes & specifications

Part Number	Diameter	Locking Torque ft/lbs	Std Wrench #	Torque Wrench Head #
NUT ERN16B	32 [1.26"]	40	WRENCH 30-32 HOOK	WRENCH TWSQ050-S32
NUT ERN20B	36 [1.42"]	60	WRENCH 34-38 HOOK	WRENCH TWSQ050-S38
NUT ERN25B	43 [1.69"]	75	WRENCH 40-42 HOOK	WRENCH TWSQ050-S40
NUT ERN32B	51 [2.01"]	100	WRENCH 50-55 HOOK	WRENCH TWSQ050-S55
NUT ERN40B	63 [2.48"]	125	WRENCH 58-65 HOOK	WRENCH TWSQ050-S65

CAT40 ER32 Stub Collet Chucks

Features

- **3 µm - 0.0001" Runout Taper to Taper**
- Coolant Thru Body
- Dynamically Pre-Balanced G6.3 @ 20,000 RPM or <1gmm
- Tapers are ground better than AT3 for optimal T.I.R.

Optional (Order Separately):

- Wrench
- Torque Wrench
- Collets
  - 0.010mm (0.0004") Standard
  - 0.005mm (0.0002") Ultra Precision
  - Sealed
  - Jet-Blast
- Fine Trim Balance (Sample cutter required for balance compensation)

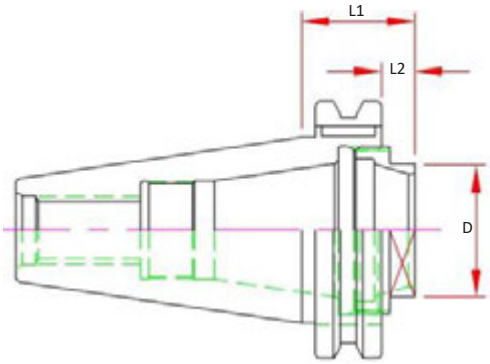

Part Number	Range	D	L1 Projection	L2	Nut	Wrench
CAT40-ER32-0106	.039-.787	32mm Hex	1.06	0.31	ERN-32H-EXT	DAW-180

CAT40 ER Mini Collet Chucks

Features

- **3 µm - 0.0001" Runout Taper to Taper**
- Coolant Thru Body
- Dynamically Pre-Balanced G6.3 @ 20,000 RPM or <1gmm
- Tapers are ground better than AT3 for optimal T.I.R.

Optional (Order Separately):

- Wrench
- Torque Wrench
- Collets
  - 0.010mm (0.0004") Standard
  - 0.005mm (0.0002") Ultra Precision
  - Sealed
  - Jet-Blast
- Fine Trim Balance (Sample cutter required for balance compensation)

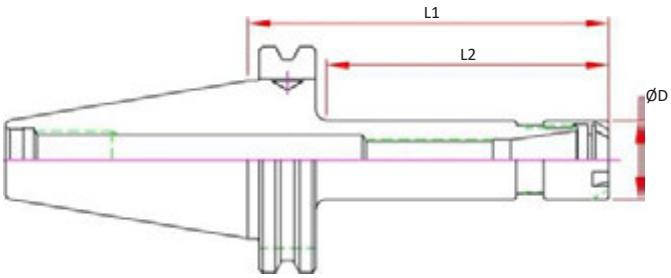

Part Number	Range	D	L1 Projection	L2	Screw	Nut	Wrench
CAT40-ER11M-0250	.019-.276	0.63	2.50	1.56	ASC-ER11	ERN-11M	ERW-11M
CAT40-ER11M-0400			4.00	2.42			
CAT40-ER11M-0600			6.00	4.42			
CAT40-ER11M-0800			8.00	6.42			
CAT40-ER16M-0250	.019-.394	0.87	2.50	1.56	ASC-ER16	ERN-16M	ERW-16M
CAT40-ER16M-0400			4.00	2.42			
CAT40-ER16M-0600			6.00	4.42			
CAT40-ER16M-0800			8.00	6.42			

CAT40 & CAT40 ER Collet Chucks

Features

- **3 µm - 0.0001" Runout Taper to Taper**
- Coolant Thru Body
- Dynamically Pre-Balanced G6.3 @ 20,000 RPM or <1gmm
- Tapers are ground better than AT3 for optimal T.I.R.

Optional (Order Separately):

- Wrench
- Torque Wrench
- Collets
  - 0.010mm (0.0004") Standard
  - 0.005mm (0.0002") Ultra Precision
  - Sealed (Select Sizes)
  - Jet-Blast (Select Sizes)
- DIN-B Coolant (Select models)

Style - 1

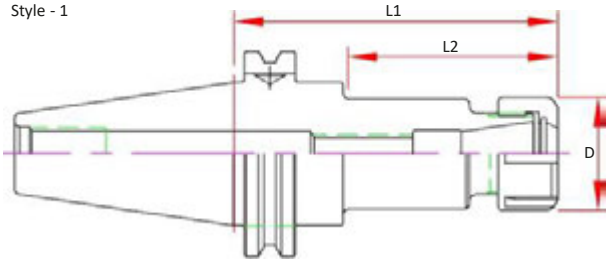

Style - 2

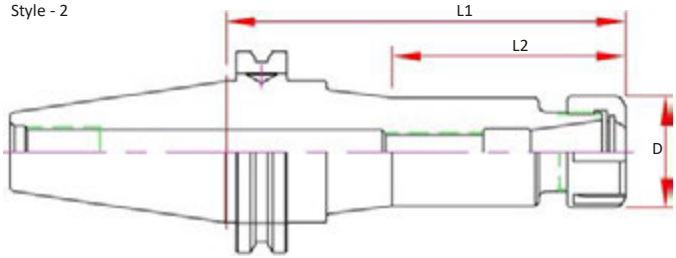

Dual Contact Spindle Part Number	Standard Spindle Part Number	Range	D	L1 Projection	L2	Screw	Nut	Wrench	Style
	CAT40-ER11H-0250			2.50	1.75				1
	CAT40-ER11H-0400	.019-.276	0.79	4.00	2.50	ASC-ER11	ERN-11H	ERW-11H	1
	CAT40-ER11H-0600			6.00	1.83				2
CAT40-ER16H-0250-B	CAT40-ER16H-0250			2.50	1.55				1
CAT40-ER16H-0400-B	CAT40-ER16H-0400	.019-.394	1.10	4.00	2.42	ASC-ER16	ERN-16H	ERW-16H	1
CAT40-ER16H-0600-B	CAT40-ER16H-0600			6.00	4.42				1
CAT40-ER16H-0800-B	CAT40-ER16H-0800			8.00	6.42				1
CAT40-ER20H-0250-B	CAT40-ER20H-0250			2.50	1.63				1
CAT40-ER20H-0400-B	CAT40-ER20H-0400	.019-.512	1.33	4.00	2.50	ASC-ER20	ERN-20H	ERW-20H	1
CAT40-ER20H-0600-B	CAT40-ER20H-0600			6.00	4.60				1
CAT40-ER20H-0800-B	CAT40-ER20H-0800			8.00	6.60				1
CAT40-ER25-0250-B	CAT40-ER25-0250			2.50	1.73				1
CAT40-ER25-0400-B	CAT40-ER25-0400	.019-.630	1.65	4.00	2.58	ASC-ER25	ERN-25	ERW-25E	1
CAT40-ER25-0600-B	CAT40-ER25-0600			6.00	4.60				1
CAT40-ER25-0800-B	CAT40-ER25-0800			8.00	6.60				1
CAT40-ER32-0250-B	CAT40-ER32-0250			2.50	1.73				1
CAT40-ER32-0400-B	CAT40-ER32-0400	.039-.787	1.96	4.00	3.23	ASC-ER32	ERN-32	ERW-32E	1
CAT40-ER32-0600-B	CAT40-ER32-0600			6.00	5.23				1
CAT40-ER32-0800-B	CAT40-ER32-0800			8.00	7.25				1
CAT40-ER40-0250-B	CAT40-ER40-0250			2.50	1.75				1
CAT40-ER40-0400-B	CAT40-ER40-0400	.079-1.024	2.48	4.00	3.25	ASC-ER40	ERN-40	ERW-40E	1
	CAT40-ER40-0600			6.00	5.25				1

CAT50 & CAT50 ER Collet Chucks

Features

- **3 µm - 0.0001" Runout Taper to Taper**
- Coolant Thru Body
- Dynamically Pre-Balanced G6.3 @ 15,000 RPM or <1gmm
- Tapers are ground better than AT3 for optimal T.I.R.

Optional (Order Separately):

- Wrench
- Torque Wrench
- Collets
  - 0.010mm (0.0004") Standard
  - 0.005mm (0.0002") Ultra Precision
  - Sealed (Select Sizes)
  - Jet-Blast (Select Sizes)
- DIN-B Coolant (Select models)

Style - 1

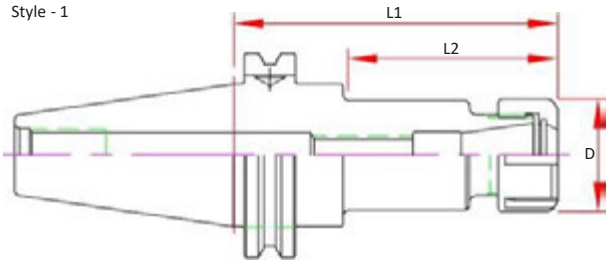

Style - 2

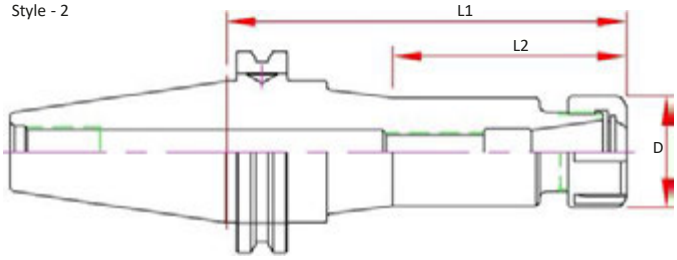

Dual Contact Spindle Part Number	Standard Spindle Part Number	Range	L2	D	L1 Projection	Screw	Nut	Wrench	Style
	CAT50-ER16H-0250		1.55		2.50				1
CAT50-ER16H-0400-B	CAT50-ER16H-0400		2.42		4.00				1
CAT50-ER16H-0600-B	CAT50-ER16H-0600		2.39		6.00				2
CAT50-ER16H-0800-B	CAT50-ER16H-0800	.019-.394	2.39	1.10	8.00	ASC-ER16	ERN-16H	ERW-16H	2
CAT50-ER16H-1000-B	CAT50-ER16H-1000		2.39		10.00				2
CAT50-ER16H-1200-B	CAT50-ER16H-1200		2.39		12.00				2
CAT50-ER16H-1500-B	CAT50-ER16H-1500		2.39		15.00				2
	CAT50-ER20H-0250		1.55		2.50				1
CAT50-ER20H-0400-B	CAT50-ER20H-0400		2.42		4.00				1
CAT50-ER20H-0600-B	CAT50-ER20H-0600	.019-.512	2.42	1.33	6.00	ASC-ER20	ERN-20H	ERW-20H	2
CAT50-ER20H-0800-B	CAT50-ER20H-0800		2.42		8.00				2
CAT50-ER20H-1500-B	CAT50-ER20H-1500		3.40		15.00				2
	CAT50-ER25-0250		1.55		2.50				1
CAT50-ER25-0400-B	CAT50-ER25-0400		2.42		4.00				1
CAT50-ER25-0600-B	CAT50-ER25-0600	.019-.630	4.42	1.65	6.00	ASC-ER25	ERN-25	ERW-25E	1
CAT50-ER25-0800-B	CAT50-ER25-0800		2.44		8.00				2
	CAT50-ER25-1500		3.42		15.00				2
	CAT50-ER32-0250		1.71		2.50				1
CAT50-ER32-0400-B	CAT50-ER32-0400		2.50		4.00				1
	CAT50-ER32-0500		3.50		5.00				1
CAT50-ER32-0600-B	CAT50-ER32-0600	.039-.787	4.50	1.96	6.00	ASC-ER32	ERN-32	ERW-32E	1
CAT50-ER32-0800-B	CAT50-ER32-0800		6.50		8.00				1
CAT50-ER32-1000-B	CAT50-ER32-1000		4.45		10.00				2
CAT50-ER32-1200-B	CAT50-ER32-1200		4.45		12.00				2
CAT50-ER32-1500-B	CAT50-ER32-1500		4.45		15.00				2
CAT50-ER40-0400-B	CAT50-ER40-0400		2.54		4.00				1
	CAT50-ER40-0500	.079-1.024		2.48	5.00	ASC-ER40	ERN-40	ERW-40E	1
CAT50-ER40-0600-B	CAT50-ER40-0600		4.54		6.00				1
CAT50-ER40-0800-B	CAT50-ER40-0800		6.54		8.00				1

BT30 & Dual Contact BT30 ER Collet Chucks

Features

- **3 µm - 0.0001" Runout Taper to Taper**
- Coolant Thru Body
- Dynamically Pre-Balanced G6.3 @ 20,000 RPM or <1gmm
- Tapers are ground better than AT3 for optimal T.I.R.

Optional (Order Separately):

- Wrench
- Torque Wrench
- Collets
  - 0.010mm (0.0004") Standard
  - 0.005mm (0.0002") Ultra Precision
  - Sealed (Select Sizes)
  - Jet-Blast (Select Sizes)
- Fine Trim Balance (Sample cutter required for balance compensation)

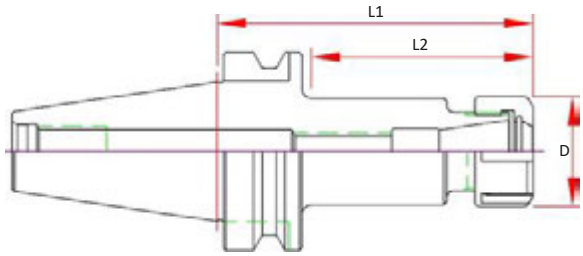

BT30 MINI NUT

Part Number	Range	D	L1 Projection	L2	Screw	Nut	Wrench
BT30-ER11M-060	.019-.276	0.63	2.36	1.46	ASC-ER11	ERN-11M	ERW-11M
BT30-ER11M-100			3.94	2.95			
BT30-ER16M-070	.019-.394	0.87	2.76	1.86	ASC-ER16	ERN-16M	ERW-16M
BT30-ER16M-100			3.94	3.03			

BT30 STD NUT

Dual Contact Spindle Part Number	Standard Spindle Part Number	Range	D	L1 Projection	L2	Screw	Nut	Wrench
BT30-ER11H-060-B	BT30-ER11H-060	.019-.276	0.74	2.36	1.46	ASC-ER11	ERN-11H	ERW-11H
BT30-ER11H-100-B	BT30-ER11H-100			3.94	2.95			
BT30-ER16H-060-B	BT30-ER16H-060	.019-.394	1.10	2.36	1.46	ASC-ER16	ERN-16H	ERW-16H
BT30-ER16H-100-B	BT30-ER16H-100			3.94	3.03			
BT30-ER20H-060-B	BT30-ER20H-060	.019-.512	1.33	2.36	1.46	ASC-ER20	ERN-20H	ERW-20H
BT30-ER20H-100-B	BT30-ER20H-100			3.94	3.03			
BT30-ER25-060-B	BT30-ER25-060	.019-.630	1.65	2.36	1.54	ASC-ER25	ERN-25	ERW-25E
BT30-ER25-100-B	BT30-ER25-100			3.94	3.11			
BT30-ER32-060-B	BT30-ER32-060	.039-.787	1.96	2.36	1.54	ASC-ER32	ERN-32	ERW-32E
BT30-ER32-100-B				3.94	1.54			

BT40 & BT40 ER Collet Chucks

Features

- **3 µm - 0.0001" Runout Taper to Taper**
- Coolant Thru Body
- Dynamically Pre-Balanced G6.3 @ 20,000 RPM or <1gmm
- Tapers are ground better than AT3 for optimal T.I.R.

Optional (Order Separately):

- Wrench
- Torque Wrench
- Collets
  - 0.010mm (0.0004") Standard
  - 0.005mm (0.0002") Ultra Precision
  - Sealed (Select Sizes)
  - Jet-Blast (Select Sizes)
- DIN-B Coolant (Select models)
- Fine Trim Balance (Sample cutter required for balance compensation)

Style - 1

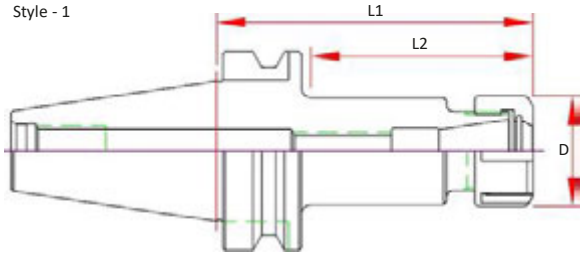

Style - 2

Dual Contact Spindle Part Number	Standard Spindle Part Number	Range	D	L1 Projection	L2	Screw	Nut	Wrench	Style
	BT40-ER11H-060			2.36	1.18				1
	BT40-ER11H-100	.019-.276	0.74	3.94	2.75	ASC-ER11	ERN-11H	ERW-11H	1
BT40-ER11H-150-B	BT40-ER11H-150			5.91	1.57				1
BT40-ER16H-060-B	BT40-ER16H-060			2.36	1.18				1
BT40-ER16H-100-B	BT40-ER16H-100	.019-.394	1.10	3.94	2.75	ASC-ER16	ERN-16H	ERW-16H	1
BT40-ER16H-160-B	BT40-ER16H-160			6.30	5.11				2
BT40-ER20H-070-B	BT40-ER20H-070			2.76	1.57				1
BT40-ER20H-100-B	BT40-ER20H-100	.019-.512	1.33	3.94	2.75	ASC-ER20	ERN-20H	ERW-20H	1
	BT40-ER20H-160			6.30	5.11				1
	BT40-ER25-060			2.36	1.26				1
	BT40-ER25-100	.019-.630	1.65	3.94	2.83	ASC-ER25	ERN-25	ERW-25E	1
	BT40-ER25-160			6.30	5.19				1
BT40-ER32-060-B				2.36	1.30				1
	BT40-ER32-075	.039-.787	1.96	2.95	1.88	ASC-ER32	ERN-32	ERW-32E	1
BT40-ER32-100-B	BT40-ER32-100			3.94	2.87				1
	BT40-ER32-160			6.30	5.23				1
BT40-ER40-080-B	BT40-ER40-080	.079-1.024	2.48	3.15	2.04	ASC-ER40	ERN-40	ERW-40E	1
	BT40-ER40-160			6.30	4.40				1

HSK063A ER Collet Chucks

Features

- **3 µm - 0.0001" Runout Taper to Taper**
- Coolant Thru Body
- Dynamically Pre-Balanced G6.3 @ 20,000 RPM or <1gmm

Optional (Order Separately):

- Wrench
- Torque Wrench
- Collets
  - 0.010mm (0.0004") Standard
  - 0.005mm (0.0002") Ultra Precision
  - Sealed (Select Sizes)
  - Jet-Blast (Select Sizes)
- Fine Trim Balance (Sample cutter required for balance compensation)

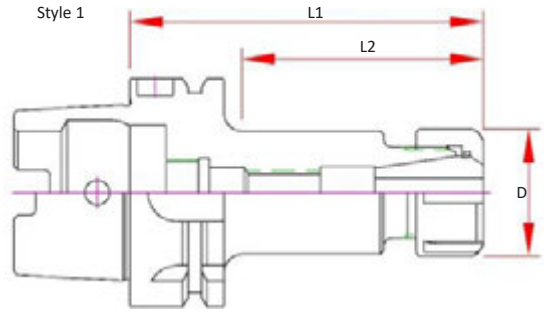

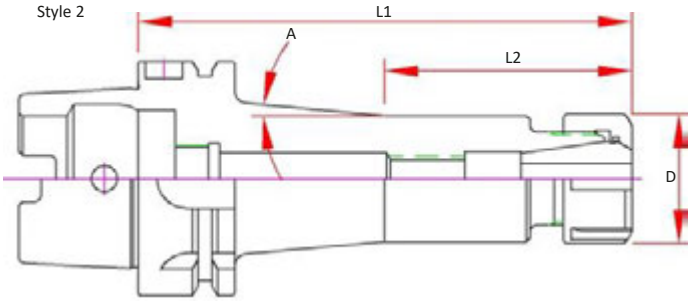

Part Number	Style	A	D	Max. Tool Enters	L1 Projection	L2	Screw	Nut	Wrench
HSK063A-ER16H-100	1	-	1.10	2.00	3.94	2.79	ASC-ER16	ERN-16H	ERW-16H
HSK063A-ER16H-160	2	5°		3.05	6.30	2.36			
HSK063A-ER20H-100	1	-	1.33	1.87	3.94	2.65	ASC-ER20	ERN-20H	ERW-20H
HSK063A-ER20H-160	1	-		2.89	6.30	5.08			
HSK063A-ER25-100	1	-	1.65	2.20	3.94	2.72	ASC-ER25	ERN-25	ERW-25E
HSK063A-ER25-160	1	-		3.90	6.30	5.08			
HSK063A-ER32-100	1	-	1.96	2.17	3.94	2.83	ASC-ER32	ERN-32	ERW-32E
HSK063A-ER32-160	1	-		4.33	6.30	5.20			
HSK063A-ER40-120	1	-	2.48	2.83	4.72	3.70	ASC-ER40	ERN-40	ERW-40E
HSK063A-ER40-160	1	-		4.02	6.30	5.20			

HSK100A ER Collet Chucks

Features

- **3 µm - 0.0001" Runout Taper to Taper**
- Coolant Thru Body
- Dynamically Pre-Balanced G6.3 @ 15,000 RPM or <1gmm

Optional (Order Separately):

- Wrench
- Torque Wrench
- Collets
  - 0.010mm (0.0004") Standard
  - 0.005mm (0.0002") Ultra Precision
  - Sealed (Select Sizes)
  - Jet-Blast (Select Sizes)
- Fine Trim Balance (Sample cutter required for balance compensation)

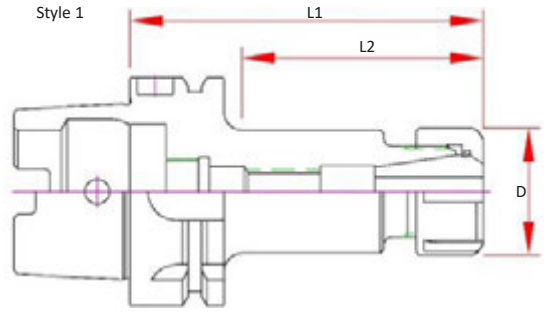

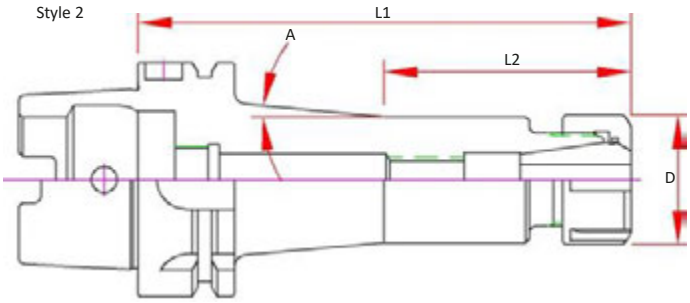

Part Number	Style	A	D	Max. Tool Enters	L1 Projection	L2	Screw	Nut	Wrench
HSK100A-ER16H-100	1	-	1.10	2.80	3.94	2.20	ASC-ER16	ERN-16H	ERW-16H
HSK100A-ER16H-160	2	6°		5.17	6.30	2.76			
HSK100A-ER25-100	1	-	1.65	2.63	3.94	2.20	ASC-ER25	ERN-25	ERW-25E
HSK100A-ER25-160	2	3°		2.95	6.30	3.35			
HSK100A-ER32-100	1	-	1.96	2.67	3.94	2.20	ASC-ER32	ERN-32	ERW-32E
HSK100A-ER32-160	2	3°		3.22	6.30	3.39			
HSK100A-ER40-100	1	-	2.48	3.46	3.94	3.35	ASC-ER40	ERN-40	ERW-40E
HSK100A-ER40-160	2	4°		3.78	6.30	3.48			

Mill ER Mini Nut Straight Shank

Features

- **3 µm - 0.0001" Runout Taper to Taper**
- Coolant Thru Body (see chart)

Optional (Order Separately):

- Wrench
- Torque Wrench
- Collets

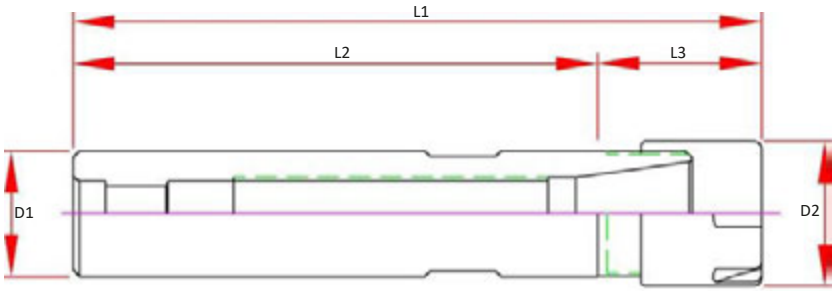

Part Number	Collet Type	D1	D2	L1	L2	L3	Preset Screw	Max Tool Dia.	Wrench	Nut Type	Coolant Thru	Optional 1/8 Hole
S037-ER08M-0394	ER8	0.3750	0.47	4.88	3.94	0.94	N/A	0.19	ERW-08M	Mini	N	-C
S050-ER11M-0552	ER11	0.5000	0.63	6.56	5.51	1.04	N/A	0.29	ERW-11M	Mini	Y	
S050-ER16M-0552	ER16	0.5000	0.87	6.97	5.51	1.46	N/A	0.26	ERW-16M	Mini	Y	
S062-ER11M-0552	ER11	0.6250	0.63	6.24	5.51	0.73	N/A	0.29	ERW-11M	Mini	N	-C
S075-ER16M-0552	ER16	0.7500	0.87	6.50	5.51	0.98	ASC-ER16	0.38	ERW-16M	Mini	Y	
S100-ER20M-0552	ER20	1.0000	1.10	6.61	5.51	1.10	ASC-ER20	0.50	ERW-20M	Mini	Y	

Mill ER Standard Nut Straight Shank

Features

- **3 µm - 0.0001" Runout Taper to Taper**
- Coolant Thru Body (see chart)

Optional (Order Separately):

- Wrench
- Torque Wrench
- Collets

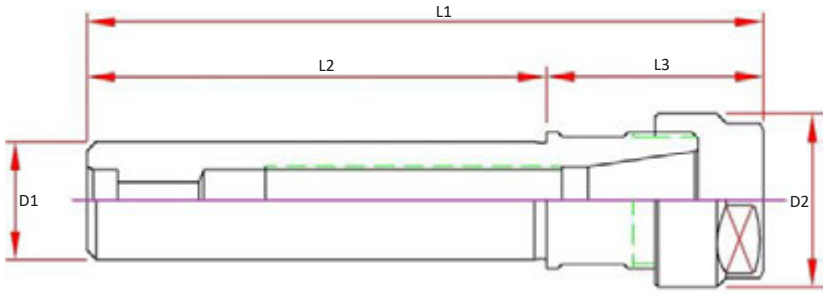

Part Number	Collet Type	D1	D2	L1	L2	L3	Preset Screw	Max Tool Dia.	Wrench	Nut Type	Coolant Thru	Optional 1/8 Hole
S050-ER11H-0552	ER11	0.5000	0.75	6.87	5.51	0.85	N/A	0.28	ERW-11H	Hex	N	-C
S062-ER11H-0552	ER11	0.6250	0.75	6.87	5.51	0.85	N/A	0.28	ERW-11H	Hex	N	-C
S062-ER16H-0236	ER16	0.6250	1.10	3.74	2.36	1.38	N/A	0.28	ERW-16H	Hex	N	-C
S075-ER16H-0197	ER16	0.7500	1.10	3.35	1.97	1.38	ASC-ER16	0.38	ERW-16H	Hex	Y	
S075-ER16H-0394	ER16	0.7500	1.10	5.32	3.94	1.38	ASC-ER16	0.38	ERW-16H	Hex	Y	
S075-ER16H-0552	ER16	0.7500	1.10	6.89	5.51	1.38	ASC-ER16	0.38	ERW-16H	Hex	Y	
S075-ER20H-0250	ER20	0.7500	1.34	3.94	2.50	1.50	ASC-ER16	0.38	ERW-20H	Hex	Y	
S100-ER20H-0552	ER20	1.0000	1.34	7.11	5.51	1.59	ASC-ER20	0.50	ERW-20H	Hex	Y	
S100-ER25-0197	ER25	1.0000	1.65	3.98	1.97	2.01	ASC-ER25	0.63	ERW-25E	Spanner	Y	
S100-ER32-0197	ER32	1.0000	1.97	4.00	1.97	2.03	ASC-ER25	0.63	ERW-32E	Spanner	Y	
S125-ER32-0236	ER32	1.2500	1.97	4.39	2.36	2.03	ASC-ER32	0.75	ERW-32E	Spanner	Y	
S125-ER32-0552	ER32	1.2500	1.97	7.54	5.51	2.03	ASC-ER32	0.75	ERW-32E	Spanner	Y	
S100-ER40-0197	ER40	1.0000	2.48	4.53	1.97	2.56	ASC-ER16	0.38	ERW-40E	Spanner	Y	

Lathe Coolant Thru Straight Shank

Features

- **3 µm - 0.0001" Runout Taper to Taper**
- Coolant Thru Body (see chart)
- Includes 1/4" Pipe Threads

Optional (Order Separately):

- Wrench
- Torque Wrench
- Collets

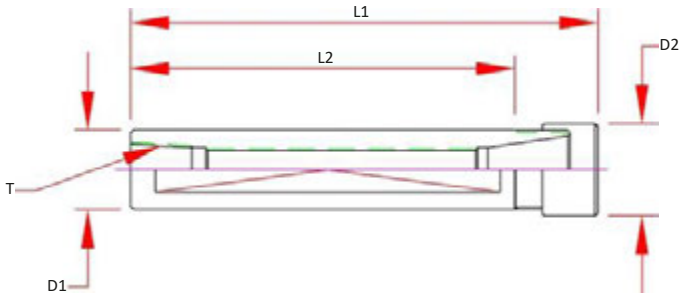

Part Number	Collet Type	D1	D2	L1	L2	T- Thread	Set Screw	Max Tool Dia.	Wrench	Nut Type
S075-ER16M-0342C	ER16	0.7500	0.87	4.34	3.42	1/4" NPT	ASC-ER16	0.38	ERW-16M	Mini
S100-ER20M-0331C	ER20	1.0000	1.10	4.38	3.31		ASC-ER20	0.50	ERW-20M	Mini
S125-ER32-0236C	ER32	1.2500	1.97	4.52	2.36		ASC-ER32	0.75	ERW-32E	E -Spanner

Lathe ER Straight Shank

Features

- **3 µm - 0.0001" Runout Taper to Taper**
- Coolant Thru Body (see chart)
- Includes O-Ring Shank Seal

Optional (Order Separately):

- Wrench
- Torque Wrench
- Collets

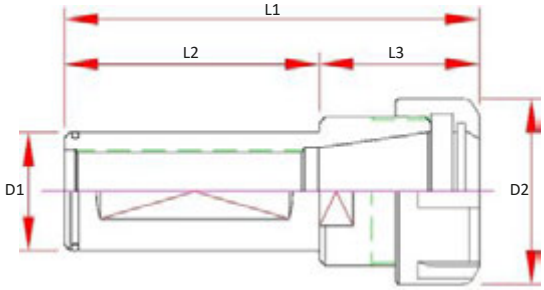

Part Number	Collet Type	D1	D2	L1	L2	L3	ID Thread	Wrench	Nut Type	O-Ring Shank Seal
S125-ER25-0236NC	ER25	1.2500	1.65	3.82	2.36	1.46	11/16-16	ERW-25E	E -Spanner	AS-024
S125-ER32-0236NC	ER32	1.2500	1.97	4.06	2.36	1.69	15/16-16	ERW-32E	E -Spanner	AS-024
S125-ER40-0236NC	ER40	1.2500	2.48	4.72	2.36	2.36	15/16-16	ERW-40E	E -Spanner	AS-024
S150-ER32-0315NC	ER32	1.5000	1.97	4.65	3.15	1.50	15/16-16	ERW-32E	E -Spanner	AS-028
S150-ER40-0295NC	ER40	1.5000	2.48	5.31	2.95	2.36	1 1/8-16	ERW-40E	E -Spanner	AS-028

Swiss Double Ended Collet Holder

Features

- **3 µm - 0.0001" Runout Taper to Taper**
- Coolant Thru Body (see chart)

Optional (Order Separately):

- Wrench
- Torque Wrench
- Collets

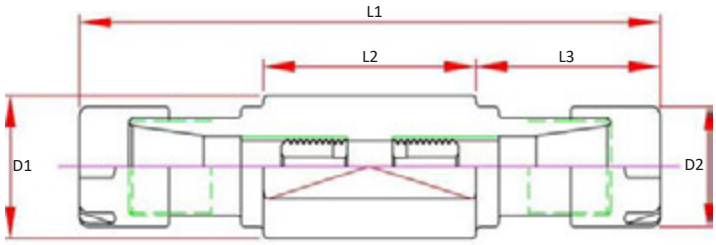

Part Number	Collet Type	D1	D2	L1	L2	L3	Wrench	Nut Type
S075-ER11M-0173DE	ER11	0.7500	0.63	2.68	1.73	0.47	ERW-11M	Mini
S075-ER11M-0256DE	ER11	0.7500	0.63	3.50	2.56	0.47	ERW-11M	Mini
S075-ER11M-0303DE	ER11	0.7500	0.63	3.98	3.03	0.47	ERW-11M	Mini
S075-ER11M-0392DE	ER11	0.7500	0.63	4.86	3.92	0.47	ERW-11M	Mini

Precision Sync ER Tapping System

Reduce Tap Wear and Extend your Tap Life

- Compensates for synchronization errors in the tap cycle
- Minimal length compensation in both Tension and Compression compensates for small pitch differences between the spindle and tap reducing friction on the tap flanks
- Increases tap life at least 30%
- For tapping speeds up to 15,000 RPM's
- For use in Left or Right hand applications
- Coolant Thru, for use up to 1,500 PSI
- Compact Design with Modular Shank options to fit many machine spindles

Coolant Thru Tapping with Precision Sync

The holder is designed for coolant thru the center. To see the tap shank use a coolant cap matching the tap shank size to create the seal.

Required (each sold separately)

- Holder
- Coolant Cap Nut (page 28)
- Coolant Cap (page 28-29)
- Tap Collet (page 26-27)

Please note the coolant tap shank must be long enough for the coolant deal to make contact on the full round diameter, tap flutes cannot enter the cap.

Precision Sync Tapping ER Straight Shank

Features

- Coolant Thru, for use up to 1,500 PSI
- Compensates for synchronization errors in the tap cycle
- Minimal length compensation in both Tension and Compression compensates for small pitch differences between the spindle and tap reducing friction on the tap flanks

Optional (Order Separately):

- Wrench
- Torque Wrench
- Collets

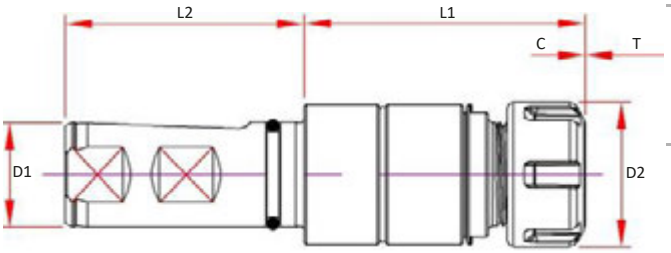

Part Number	Collet Type	D1	D2	L1	L2	C	T	Wrench
S100-PT20-0268	ER20	1.00	1.34	2.79	2.28	0.02	0.02	ERW-20H
S100-PT32-0325	ER32	1.00	1.97	3.25	2.28	0.02	0.02	ERW-32E

Modular Taper Assembly

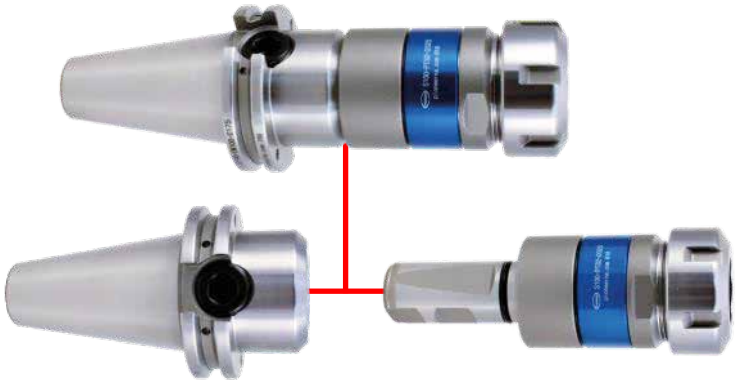

Features

- Coolant Thru, for use up to 1,500 PSI
  DIN B flange coolant available in some models
- For Total Projection:
  Add "L" from chart below with "L1" from chart above
- Longer projections available see EM section of the catalog

Optional (Order Separately):

- Wrench
- Torque Wrench
- Collets

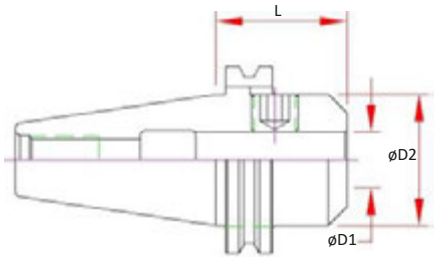

Dual Contact Spindle Part Number	Standard Spindle Part Number	D1	D2	L
BT30-EM100-0275-B	BT30-EM100-0275	1.000	2.00	2.75
BT40-EM100-0200-B	BT40-EM100-0200		2.00	2.00
CAT40-EM100-0175-B	CAT40-EM100-0175		1.75	1.75
CAT50-EM100-0162-B	CAT50-EM100-0162		2.75	1.62
	HSK 63A-EM100-0400		2.00	4.00
	HSK100A-EM100-0400		2.00	4.00

ER Collets

Optimize your work in many ways:

Pioneer has updated our collet offering to meet the high demands of precision cutting tools and high performance applications.

ER collets are now offered in standard, sealed by design and tap collets.

- Pioneer standard collets come in General Purpose and new Stainless Steel Ultra Precision. The stainless steel collets are made from 420 Stainless and hardened to Rc45.
- Pioneer Sealed collets are sealed by alternating slots. The cutting tool shank must make full contact with the collet bore to create a seal. This design allows for the highest coolant pressures without damage to the collet.
- Pioneer Tap Collets are available in ANSI and DIN configurations with a square punched into the ID for positive drive.

Stainless Steel Precision Collets

Pioneer Stainless Steel Collets are only available in a 5 micron (0.0002”) TIR @ 3D.

The picture to the right is a standard ER collet and a Stainless Steel Collet that were submerged in Chicago tap water for 3 months. The stainless collet showed no corrosion anywhere compared to the standard collet.

420 Stainless is a 12% Chromium high carbon material which provides high hardenability and superior corrosion resistance. 420 Stainless allows us to harden the collets to Rc45, similar hardness as most standard ER collets in the market today.

Available in ER11-ER32 in select sizes.

ER08 Precision Collets

Features

- Standard 15 Microns @ 2D (0.0006” @ 2D)

ER08

ER08 Metric		General Purpose 15 Micron @ 2D
Metric Max	Metric Min	ER08
3.0	2.5	ER08-M030
3.5	3.0	ER08-M035
4.0	3.5	ER08-M040
4.5	4.0	ER08-M045
5.0	4.5	ER08-M050

ER08 Collet Sets				General Purpose 15 Micron @ 2D
QTY	Sizes	Incr.		ER08
5	3.0 - 5.0mm	0.5mm	Tray	ER08 MSET 5PCS

ER11 Precision Collets

Features

- Standard 10 Microns @ 2D (0.0004” @ 2D)
- Stainless Steel
  ER-UP Precision 5 Microns @ 3D (0.0002” @ 3D)
- Stainless Steel—Hand Inspected @ Pioneer
  ER-UPP Precision 3 Microns @ 3D (0.0001” @ 3D)

ER11

ER11***UP
Stainless Steel

ER11***UPP
Stainless Steel
Hand Inspected
@ Pioneer

ER11 Inch		General Purpose 10 Micron @ 2D	Precision 5 Micron @ 3D	Ultra-Precision 3 Micron @ 3D
Inch Max	Inch Min	ER11	ER11UP Stainless Steel	ER11UPP Stainless Steel
0.1250	0.1053	ER11-0125	ER11-0125UP	ER11-0125UPP
0.1563	0.1366	ER11-0156		
0.1875	0.1678	ER11-0187	ER11-0187UP	ER11-0187UPP
0.2188	0.1991	ER11-0218		
0.2500	0.2303	ER11-0250	ER11-0250UP	ER11-0250UPP

ER11 Metric		General Purpose 10 Micron @ 2D	Precision 5 Micron @ 3D	Ultra-Precision 3 Micron @ 3D
Metric Max	Metric Min	ER11	ER11UP Stainless Steel	ER11UPP Stainless Steel
1.0	0.5		ER11-M010UP*	ER11-M010UPP*
1.5	1.0		ER11-M015UP*	ER11-M015UPP*
2.0	1.5		ER11-M020UP*	ER11-M020UPP*
2.5	2.0		ER11-M025UP*	ER11-M025UPP*
3.0	2.5	ER11-M030	ER11-M030UP	ER11-M030UPP
3.5	3.0	ER11-M035	ER11-M035UP	ER11-M035UPP
4.0	3.5	ER11-M040	ER11-M040 UP	ER11-M040UPP
4.5	4.0	ER11-M045	ER11-M045 UP	ER11-M045UPP
5.0	4.5	ER11-M050	ER11-M050UP	ER11-M050UPP
5.5	5.0	ER11-M055	ER11-M055UP	ER11-M055UPP
6.0	5.5	ER11-M060	ER11-M060UP	ER11-M060UPP
6.5	6.0	ER11-M065	ER11-M065UP	ER11-M065UPP
7.0	6.5	ER11-M070	ER11-M070UP	ER11-M070UPP

* Anti-Rust Coated Steel, 3mm+ Stainless Steel

ER11 Collet Sets			General Purpose 10 Micron @ 2D	Ultra Precision 5 Micron @ 3D
QTY	Sizes	Incr.	ER11	ER11UP Stainless Steel
5	1/8-1/4	1/32	ER11 ISET 5PCS	
9	3.0-7.0mm	0.5mm	ER11 MSET 9PCS	
9	1.0-7.0mm	0.5mm		ER11 MSET UP 5UM - 9PCS

ER16 Precision Collets

Features

- Standard 10 Microns @ 2D (0.0004" @ 2D)
- Stainless Steel
  ER-UP Precision 5 Microns @ 3D (0.0002" @ 3D)
- Stainless Steel—Hand Inspected @ Pioneer
  ER-UPP Precision 3 Microns @ 3D (0.0001" @ 3D)

ER16

ER16***UP
Stainless Steel

ER16***UPP
Stainless Steel
Hand Inspected
@ Pioneer

ER16 Inch		General Purpose	Precision	Ultra-Precision
		10 Micron @ 2D	5 Micron @ 3D	3 Micron @ 3D
Inch Max	Inch Min	ER16	ER16UP Stainless Steel	ER16UPP Stainless Steel
0.1250	0.0856	ER16-0125	ER16-0125UP	ER16-0125UPP
0.1563	0.1169	ER16-0156		
0.1875	0.1481	ER16-0187	ER16-0187UP	ER16-0187UPP
0.2188	0.1794	ER16-0218		
0.2500	0.2106	ER16-0250	ER16-0250UP	ER16-0250UPP
0.2813	0.2419	ER16-0281		
0.3125	0.2731	ER16-0312	ER16-0312UP	ER16-0312UPP
0.3438	0.3044	ER16-0344		
0.3750	0.3356	ER16-0375	ER16-0375UP	ER16-0375UPP
0.4063	0.3669	ER16-0406		

ER16 Metric		General Purpose	Precision	Ultra-Precision
		10 Micron @ 2D	5 Micron @ 3D	3 Micron @ 3D
Metric Max	Metric Min	ER16	ER16UP Stainless Steel	ER16UPP Stainless Steel
1.0	0.5		ER16-M010UP*	ER16-M010UPP*
1.5	1.0		ER16-M015UP*	ER16-M015UPP*
2.0	1.5		ER16-M020UP*	ER16-M020UPP*
2.5	2.0		ER16-M025UP*	ER16-M025UPP*
3.0	2.0	ER16-M030	ER16-M030UP	ER16-M030UPP
3.5	2.5	ER16-M035	ER16-M035UP	ER16-M035UPP
4.0	3.0	ER16-M040	ER16-M040UP	ER16-M040UPP
5.0	4.0	ER16-M050	ER16-M050UP	ER16-M050UPP
6.0	5.0	ER16-M060	ER16-M060UP	ER16-M060UPP
7.0	6.0	ER16-M070	ER16-M070UP	ER16-M070UPP
8.0	7.0	ER16-M080	ER16-M080UP	ER16-M080UPP
9.0	8.0	ER16-M090	ER16-M090UP	ER16-M090UPP
10.0	9.0	ER16-M100	ER16-M100UP	ER16-M100UPP

* Anti-Rust Coated Steel, 3mm+ Stainless Steel

ER16 Collet Sets			General Purpose	Ultra-Precision
			10 Micron @ 2D	5 Micron @ 3D
QTY	Sizes	Incr.	ER16	ER16UP Stainless Steel
9	1/8-3/8	1/32	ER16 ISET 9PCS	
5	1/8-3/8	1/16		ER16 ISET UP 5UM - 5PCS
8	3.0-10.0mm	1mm	ER16 MSET 8PCS	
8	3.0-10.0mm	1mm		ER16 MSET UP 5UM - 8PCS

ER20 Precision Collets

Features

- Standard 10 Microns @ 2D (0.0004" @ 2D)
- Stainless Steel
  ER-UP Precision 5 Microns @ 3D (0.0002" @ 3D)
- Stainless Steel—Hand Inspected @ Pioneer
  ER-UPP Precision 3 Microns @ 3D (0.0001" @ 3D)

ER20

ER20***UP
Stainless Steel

ER20***UPP
Stainless Steel
Hand Inspected
@ Pioneer

ER20 Inch		General Purpose	Precision	Ultra-Precision
		10 Micron @ 2D	5 Micron @ 3D	3 Micron @ 3D
Inch Max	Inch Min	ER20	ER20UP Stainless Steel	ER20UPP Stainless Steel
0.1250	0.0856	ER20-0125	ER20-0125UP	ER20-0125UPP
0.1563	0.1169	ER20-0156		
0.1875	0.1481	ER20-0187	ER20-0187UP	ER20-0187UPP
0.2188	0.1794	ER20-0218		
0.2500	0.2106	ER20-0250	ER20-0250UP	ER20-0250UPP
0.2813	0.2419	ER20-0281		
0.3125	0.2731	ER20-0312	ER20-0312UP	ER20-0312UPP
0.3438	0.3044	ER20-0344		
0.3750	0.3356	ER20-0375	ER20-0375UP	ER20-0375UPP
0.4063	0.3669	ER20-0406		
0.4375	0.3981	ER20-0438	ER20-0438UP	ER20-0438UPP
0.4688	0.4294	ER20-0469		
0.5000	0.4606	ER20-0500	ER20-0500UP	ER20-0500UPP

ER20 Metric		General Purpose	Precision	Ultra-Precision
		10 Micron @ 2D	5 Micron @ 3D	3 Micron @ 3D
Metric Max	Metric Min	ER20	ER20UP Stainless Steel	ER20UPP Stainless Steel
1.0	0.5		ER20-M010UP*	ER20-M010UPP*
1.5	1.0		ER20-M015UP*	ER20-M015UPP*
2.0	1.5		ER20-M020UP*	ER20-M020UPP*
2.5	2.0		ER20-M025UP*	ER20-M025UPP*
3.0	2.0	ER20-M030	ER20-M030UP	ER20-M030UPP
3.5	2.5	ER20-M035	ER20-M035UP	ER20-M035UPP
4.0	3.0	ER20-M040	ER20-M040UP	ER20-M040UPP
5.0	4.0	ER20-M050	ER20-M050UP	ER20-M050UPP
6.0	5.0	ER20-M060	ER20-M060UP	ER20-M060UPP
7.0	6.0	ER20-M070	ER20-M070UP	ER20-M070UPP
8.0	7.0	ER20-M080	ER20-M080UP	ER20-M080UPP
9.0	8.0	ER20-M090	ER20-M090UP	ER20-M090UPP
10.0	9.0	ER20-M100	ER20-M100UP	ER20-M100UPP
11.0	10.0	ER20-M110	ER20-M110UP	ER20-M110UPP
12.0	11.0	ER20-M120	ER20-M120UP	ER20-M120UPP
13.0	12.0	ER20-M130	ER20-M130UP	ER20-M130UPP

* Anti-Rust Coated Steel, 3mm+ Stainless Steel

ER20 Collet Sets			General Purpose	Ultra-Precision
			10 Micron @ 2D	5 Micron @ 3D
QTY	Sizes	Incr.	ER20	ER20UP Stainless Steel
12	5/32-1/2	1/32	ER20 ISET 12PCS	
7	1/8-1/2	1/16		ER20 ISET UP 5UM - 7PCS
11	3-13mm	1mm	ER20 MSET 11PCS	
11	3-13mm	1mm		ER20 MSET UP 5UM - 11PCS

* Items stocked in Germany

ER25 Precision Collets

Features

- Standard 10 Microns @ 2D (0.0004" @ 2D)
- Stainless Steel
  ER-UP Precision 5 Microns @ 3D (0.0002" @ 3D)
- Stainless Steel—Hand Inspected @ Pioneer
  ER-UPP Precision 3 Microns @ 3D (0.0001" @ 3D)

ER25

ER25***UP
Stainless Steel

ER25***UPP
Stainless Steel
Hand Inspected
@ Pioneer

ER25 Inch		General Purpose	Precision	Ultra-Precision
		10 Micron @ 2D	5 Micron @ 3D	3 Micron @ 3D
Inch Max	Inch Min	ER25	ER25UP Stainless Steel	ER25UPP Stainless Steel
0.1250	0.1053	ER25-0125	ER25-0125UP	ER25-0125UPP
0.1563	0.1366	ER25-0156		
0.1875	0.1678	ER25-0187	ER25-0187UP	ER25-0187UPP
0.2188	0.1991	ER25-0218		
0.2500	0.2303	ER25-0250	ER25-0250UP	ER25-0250UPP
0.2813	0.2616	ER25-0281		
0.3125	0.2928	ER25-0312	ER25-0312UP	ER25-0312UPP
0.3438	0.3241	ER25-0344		
0.3750	0.3553	ER25-0375	ER25-0375UP	ER25-0375UPP
0.4063	0.3866	ER25-0406		
0.4375	0.4178	ER25-0438	ER25-0438UP	ER25-0438UPP
0.4688	0.4491	ER25-0469		
0.5000	0.4803	ER25-0500	ER25-0500UP	ER25-0500UPP
0.5313	0.5116	ER25-0531		
0.5625	0.5428	ER25-0563	ER25-0563UP	ER25-0563UPP
0.5938	0.5741	ER25-0594		
0.6250	0.6053	ER25-0625	ER25-0625UP	ER25-0625UPP

ER25 Metric		General Purpose	Precision	Ultra-Precision
		10 Micron @ 2D	5 Micron @ 3D	3 Micron @ 3D
Metric Max	Metric Min	ER25	ER25UP Stainless Steel	ER25UPP Stainless Steel
3.0	2.5	ER25-M030	ER25-M030UP	ER25-M030UPP
3.5	3.0	ER25-M035	ER25-M035UP	ER25-M035UPP
4.0	3.5	ER25-M040	ER25-M040UP	ER25-M040UPP
5.0	4.5	ER25-M050	ER25-M050UP	ER25-M050UPP
6.0	5.5	ER25-M060	ER25-M060UP	ER25-M060UPP
7.0	6.5	ER25-M070	ER25-M070UP	ER25-M070UPP
8.0	7.5	ER25-M080	ER25-M080UP	ER25-M080UPP
9.0	8.5	ER25-M090	ER25-M090UP	ER25-M090UPP
10.0	9.5	ER25-M100	ER25-M100UP	ER25-M100UPP
11.0	10.5	ER25-M110	ER25-M110UP	ER25-M110UPP
12.0	11.5	ER25-M120	ER25-M120UP	ER25-M120UPP
13.0	12.5	ER25-M130	ER25-M130UP	ER25-M130UPP
14.0	13.5	ER25-M140	ER25-M140UP	ER25-M140UPP
15.0	14.5	ER25-M150	ER25-M150UP	ER25-M150UPP
16.0	15.5	ER25-M160	ER25-M160UP	ER25-M160UPP

ER25 Collet Sets			General Purpose	Ultra-Precision
			10 Micron @ 2D	5 Micron @ 3D
QTY	Sizes	Incr.	ER25	ER25UP Stainless Steel
15	3/16-5/8	1/32	ER25 ISET 15PCS	
9	1/8-5/8	1/16		ER25 ISET UP 5UM - 9PCS
14	3.0-16.0mm	1mm	ER25 MSET 14PCS	
15	3.0-16.0mm	1mm		ER25 MSET UP 5UM - 14PCS

ER32 Precision Collets

Features

- Standard 10 Microns @ 2D (0.0004" @ 2D)
- Stainless Steel
  ER-UP Precision 5 Microns @ 3D (0.0002" @ 3D)
- Stainless Steel—Hand Inspected @ Pioneer
  ER-UPP Precision 3 Microns @ 3D (0.0001" @ 3D)

ER32

ER32***UP
Stainless Steel

ER32***UPP
Stainless Steel
Hand Inspected
@ Pioneer

ER32 Inch		General Purpose	Precision	Ultra-Precision
		10 Micron @ 2D	5 Micron @ 3D	3 Micron @ 3D
Inch Max	Inch Min	ER32	ER32UP Stainless Steel	ER32UPP Stainless Steel
0.1250	0.0856	ER32-0125	ER32-0125UP	ER32-0125UPP
0.1563	0.1169	ER32-0156		
0.1875	0.1481	ER32-0187	ER32-0187UP	ER32-0187UPP
0.2188	0.1794	ER32-0218		
0.2500	0.2106	ER32-0250	ER32-0250UP	ER32-0250UPP
0.2813	0.2419	ER32-0281		
0.3125	0.2731	ER32-0312	ER32-0312UP	ER32-0312UPP
0.3438	0.3044	ER32-0344		
0.3750	0.3356	ER32-0375	ER32-0375UP	ER32-0375UPP
0.4063	0.3669	ER32-0406		
0.4375	0.3981	ER32-0438	ER32-0438UP	ER32-0438UPP
0.4688	0.4294	ER32-0469		
0.5000	0.4606	ER32-0500	ER32-0500UP	ER32-0500UPP
0.5313	0.4919	ER32-0531		
0.5625	0.5231	ER32-0563	ER32-0563UP	ER32-0563UPP
0.5938	0.5544	ER32-0594		
0.6250	0.5856	ER32-0625	ER32-0625UP	ER32-0625UPP
0.6563	0.6169	ER32-0656		
0.6875	0.6481	ER32-0688	ER32-0688UP	ER32-0688UPP
0.7188	0.6794	ER32-0719		
0.7500	0.7106	ER32-0750	ER32-0750UP	ER32-0750UPP

ER32 Metric		General Purpose	Precision	Ultra-Precision
		10 Micron @ 2D	5 Micron @ 3D	3 Micron @ 3D
Metric Max	Metric Min	ER32	ER32UP Stainless Steel	ER32UP P Stainless Steel
3.0	2.0	ER32-M030	ER32-M030UP	ER32-M030UPP
3.5	2.5	ER32-M035	ER32-M035UP	ER32-M035UPP
4.0	3.0	ER32-M040	ER32-M040UP	ER32-M040UPP
5.0	4.0	ER32-M050	ER32-M050UP	ER32-M050UPP
6.0	5.0	ER32-M060	ER32-M060UP	ER32-M060UPP
7.0	6.0	ER32-M070	ER32-M070UP	ER32-M070UPP
8.0	7.0	ER32-M080	ER32-M080UP	ER32-M080UPP
9.0	8.0	ER32-M090	ER32-M090UP	ER32-M090UPP
10.0	9.0	ER32-M100	ER32-M100UP	ER32-M100UPP
11.0	10.0	ER32-M110	ER32-M110UP	ER32-M110UPP
12.0	11.0	ER32-M120	ER32-M120UP	ER32-M120UPP
13.0	12.0	ER32-M130	ER32-M130UP	ER32-M130UPP
14.0	13.0	ER32-M140	ER32-M140UP	ER32-M140UPP
15.0	14.0	ER32-M150	ER32-M150UP	ER32-M150UPP
16.0	15.0	ER32-M160	ER32-M160UP	ER32-M160UPP
17.0	16.0	ER32-M170	ER32-M170UP	ER32-M170UPP
18.0	17.0	ER32-M180	ER32-M180UP	ER32-M180UPP
19.0	18.0	ER32-M190	ER32-M190UP	ER32-M190UPP
20.0	19.0	ER32-M200	ER32-M200UP	ER32-M200UPP

ER32 Collet Sets			General Purpose	Ultra-Precision
			10 Micron @ 2D	5 Micron @ 3D
QTY	Sizes	Incr.	ER32	ER32UP Stainless Steel
10	1/8-5/8 +3/4	1/16	ER32 ISET 10PCS	
11	1/8-3/4	1/16	ER32 ISET 11PCS	
18	7/32-3/4	1/32	ER32 ISET 18PCS	
12	1/8-3/4	1/16		ER32 ISET UP 5UM - 11PCS
18	3-20mm	1mm	ER32 MSET 18PCS	
18	3-20mm	1mm		ER32 MSET UP 5UM - 18PCS

ER40 Precision Collets

Features

- Standard 10 Microns @ 2D (0.0004" @ 2D)

ER40

ER40 Inch		General Purpose 10 Micron @ 2D
Inch Max	Inch Min	ER40
0.1250	0.0856	ER40-0125
0.1563	0.1169	ER40-0156
0.1875	0.1481	ER40-0187
0.2188	0.1794	ER40-0218
0.2500	0.2106	ER40-0250
0.2813	0.2419	ER40-0281
0.3125	0.2731	ER40-0312
0.3438	0.3044	ER40-0344
0.3750	0.3356	ER40-0375
0.4063	0.3669	ER40-0406
0.4375	0.3981	ER40-0438
0.4688	0.4294	ER40-0469
0.5000	0.4606	ER40-0500
0.5313	0.4919	ER40-0531
0.5625	0.5231	ER40-0563
0.5938	0.5544	ER40-0594
0.6250	0.5856	ER40-0625
0.6563	0.6169	ER40-0656
0.6875	0.6481	ER40-0688
0.7188	0.6794	ER40-0719
0.7500	0.7106	ER40-0750
0.7813	0.7419	ER40-0781
0.8125	0.7731	ER40-0813
0.8438	0.8044	ER40-0844
0.8750	0.8356	ER40-0875
0.9063	0.8669	ER40-0906
0.9375	0.8981	ER40-0938
0.9688	0.9294	ER40-0969
1.0000	0.9606	ER40-1000

ER40 Metric		General Purpose 10 Micron @ 2D
Metric Max	Metric Min	ER40
3.0	3.0	ER40-M030
3.5	3.5	ER40-M035
4.0	3.0	ER40-M040
5.0	4.0	ER40-M050
6.0	5.0	ER40-M060
7.0	6.0	ER40-M070
8.0	7.0	ER40-M080
9.0	8.0	ER40-M090
10.0	9.0	ER40-M100
11.0	10.0	ER40-M110
12.0	11.0	ER40-M120
13.0	12.0	ER40-M130
14.0	13.0	ER40-M140
15.0	14.0	ER40-M150
16.0	15.0	ER40-M160
17.0	16.0	ER40-M170
18.0	17.0	ER40-M180
19.0	18.0	ER40-M190
20.0	19.0	ER40-M200
21.0	20.0	ER40-M210
22.0	21.0	ER40-M220
23.0	22.0	ER40-M230
24.0	23.0	ER40-M240
25.0	24.0	ER40-M250
26.0	25.0	ER40-M260

ER40 Collet Sets				General Purpose 10 Micron @ 2D
QTY	Sizes	Incr.		ER40
13	1/8-3/4 in 1/16 + 7/8 + 1		Tray	ER40 ISET 13PCS
15	1/8-1	1/16	Tray	ER40 ISET 15PCS
29	1/8-1	1/32	Tray	ER40 ISET 29PCS
23	4-26mm	1mm	Tray	ER40 MSET 23PCS

Collet Nuts

Pioneer replacement ER nuts exceed industry standard for fit, finish and balance.

ER nuts are in 4 styles, Mini, Hex, E Type & RD Type.

- **Hex Nuts** are standard for ER11, ER16 & ER20. Smaller diameter than E-Type with standard chuck threads. Hex nuts are machined with an eccentric for easy collet installation and removal.
- **E-Type** or castle type use the 4 prong wrench or spanner wrench, standard on ER25, ER32 & ER40. E-Type nuts are machined with an eccentric for easy collet installation and removal.
- **-EXT** are external threaded nuts for stub length holders. Due to the constraints of the design collets must be "snapped" into the nut. Tap and Sealed Collets are difficult to install and remove.
- **Mini nuts** are designed for reduced threaded Mini Chucks. Mini nuts use a special E type wrench. Mini's are not interchangeable with Hex or E-Type. Mini nuts are a compression type nut, must be pressed onto the collet for the nut to extract the collet from the chuck.

  Note: Mini Nuts do not function well with some sealed and tap collets due to the limited space to tip the collet for removal. Some small ID, tap and sealed collets are difficult to compress causing issues in installation and removal.

Mini Type

Hex Style

E Type

Collet Retainer Type

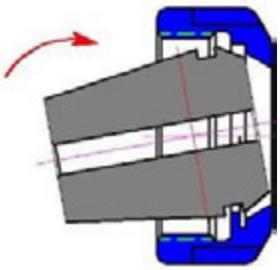

Hex, E-Type & RD
Eccentric Design

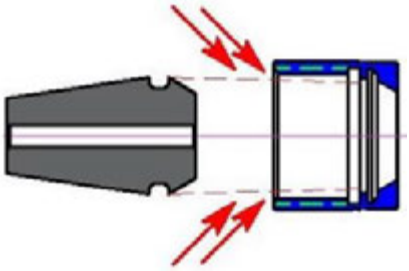

Mini Compression Design

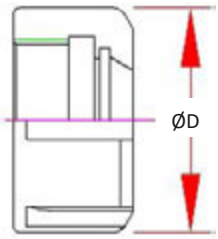

Note: ER Nuts are built to DIN standards. Per DIN tolerances the collet may or many not be retained by an eccentric style nut. If the collet is not retained into an eccentric style nut are not defective but a result of the DIN tolerances.

Nut Part Number	Description	Wrench Part Number	Collet Retainer	Ø D	Thread	Max. Torque
ERN-08M	ER 8 Mini Nut	WRENCH ERW-8M	Compression	0.472 / 12mm	M10 x 0.75	6 ft/lbs
ERN-11H	ER 11 Nut -Hex	WRENCH ERW-11H	Eccentric	0.787 / 20mm	M14 x 0.75	18 ft/lbs
ERN-11M	ER 11 Mini Nut	WRENCH ERW-11M	Eccentric	0.630 / 16mm	M13 x 0.75	9 ft/lbs
ERN-16B	ER 16 Nut - E Type	WRENCH 30-32 HOOK	Compression	1.260 / 32mm	M22 x 1.5	40 ft/lbs
ERN-16H	ER 16 Nut -Hex	WRENCH ERW-16H	Eccentric	1.102 / 28mm	M22 x 1.5	40 ft/lbs
ERN-16E	ER 16 Nut - E Type	WRENCH ERW-16E	Eccentric	1.260 / 32mm	M22 x 1.5	40 ft/lbs
ERN-16M	ER 16 Mini Nut	WRENCH ERW-16M	Eccentric	0.866 / 22mm	M19 x 1.0	13 ft/lbs
ERN-20B	ER 20 Nut - E Type	WRENCH 34-38 HOOK	Compression	1.380 / 35mm	M25 x 1.5	60 ft/lbs
ERN-20H	ER 20 Nut -Hex	WRENCH ERW-20H	Eccentric	1.338 / 34mm	M25 x 1.5	60 ft/lbs
ERN-20E	ER 20 Nut - E Type	WRENCH ERW-20E	Eccentric	1.380 / 35mm	M25 x 1.5	60 ft/lbs
ERN-20M	ER 20 Mini Nut	WRENCH ERW-20M	Eccentric	1.102 / 28mm	M24 x 1.0	17 ft/lbs
ERN-25B	ER 25 Nut - E Type	WRENCH 40-42 HOOK	Compression	1.654 / 42mm	M32 x 1.5	75 ft/lbs
ERN-25E	ER 25 Nut - E Type	WRENCH ERW-25E	Eccentric	1.654 / 42mm	M32 x 1.5	75 ft/lbs
ERN-32B	ER 32 Nut - E Type	WRENCH 50-55 HOOK	Compression	1.969 / 50mm	M40 x 1.5	100 ft/lbs
ERN-32E	ER 32 Nut - E Type	WRENCH ERW-32E	Eccentric	1.969 / 50mm	M40 x 1.5	100 ft/lbs
ERN-32H-EXT	ER 32 Ext Nut—Hex	WRENCH DAW180	Compression	M40	M40	100 ft/lbs
ERN-40B	ER 40 Nut - E Type	WRENCH 58-65 HOOK	Compression	2.480 / 63mm	M50 x 1.5	125 ft/lbs
ERN-40E	ER 40 Nut - E Type	WRENCH ERW-40E	Eccentric	2.480 / 63mm	M50 x 1.5	125 ft/lbs

SSER Coolant Collets - Inch

Features

- High Pressure Coolant - 1,500 PSI
- Standard .0004" T.I.R.
- On Size Collets - Will Not Collapse
- Designed for h6 Tool Shanks

Cutter Shank	Inch	Metric	SSER 16	SSER 20	SSER 25	SSER 32	SSER 40
1/8	0.1250	3.175	SSER16-0125	SSER20-0125		SSER32-0125	
5/32	0.1563	3.969	SSER16-0156	SSER20-0156	SSER25-0156	SSER32-0156	SSER40-0156
3/16	0.1880	4.775	SSER16-0187	SSER20-0187	SSER25-0187	SSER32-0187	SSER40-0187
7/32	0.2188	5.558	SSER16-0218	SSER20-0218	SSER25-0218	SSER32-0218	SSER40-0218
1/4	0.2500	6.350	SSER16-0250	SSER20-0250	SSER25-0250	SSER32-0250	SSER40-0250
9/32	0.2813	7.145	SSER16-0281	SSER20-0281	SSER25-0281	SSER32-0281	SSER40-0281
5/16	0.3125	7.938	SSER16-0312	SSER20-0312	SSER25-0312	SSER32-0312	SSER40-0312
11/32	0.3437	8.730	SSER16-0344	SSER20-0344	SSER25-0344	SSER32-0344	SSER40-0344
3/8	0.3750	9.525	SSER16-0375	SSER20-0375	SSER25-0375	SSER32-0375	SSER40-0375
13/32	0.4063	10.320	SSER16-0406	SSER20-0406	SSER25-0406	SSER32-0406	SSER40-0406
7/16	0.4375	11.113		SSER20-0438	SSER25-0438	SSER32-0438	SSER40-0438
15/32	0.4688	11.908		SSER20-0469	SSER25-0469	SSER32-0469	SSER40-0469
1/2	0.5000	12.700		SSER20-0500	SSER25-0500	SSER32-0500	SSER40-0500
17/32	0.5313	13.495			SSER25-0531	SSER32-0531	SSER40-0531
9/16	0.5625	14.288			SSER25-0563	SSER32-0563	SSER40-0563
19/32	0.5938	15.083			SSER25-0594	SSER32-0594	SSER40-0594
5/8	0.6250	15.875			SSER25-0625	SSER32-0625	SSER40-0625
21/32	0.6563	16.670				SSER32-0656	SSER40-0656
11/16	0.6875	17.463				SSER32-0688	SSER40-0688
23/32	0.7188	18.258				SSER32-0719	SSER40-0719
3/4	0.7500	19.050				SSER32-0750	SSER40-0750
25/32	0.7813	19.845					SSER40-0781
13/16	0.8125	20.638					SSER40-0812
27/32	0.8438	21.433					SSER40-0844
7/8	0.8750	22.225					SSER40-0875
29/32	0.9063	23.020					SSER40-0906
15/16	0.9375	23.813					SSER40-0937
31/32	0.9688	24.608					SSER40-0969
1	1.0000	25.400					SSER40-1000

SSER Collet Sets				General Purpose 10 Micron @ 2D
QTY	Sizes	Incr.		
9	1/8—3/8	1/32	Tray	SSER16 ISET09
7	4mm—10mm	1mm	Tray	SSER16 MSET07
12	5/32—1/2	1/32	Tray	SSER20 ISET12
10	4mm—13mm	1mm	Tray	SSER20 MSET10
16	5/32—5/8	1/32	Tray	SSER25 ISET16
13	4mm—16mm	1mm	Tray	SSER25 MSET13
18	7/32—3/4	1/32	Tray	SSER32 ISET18
17	4mm-20mm	1mm	Tray	SSER32 MSET17
13	1/4—1"	1/16	Tray	SSER40 ISET13
25	1/4—1"	1/32	Tray	SSER40 ISET25
21	6mm—26mm	1mm	Tray	SSER40 MSET21

SSER Coolant Collets - Metric

Features

- High Pressure Coolant - 1,500 PSI
- Standard .0004" T.I.R.
- On Size Collets - Will Not Collapse
- Designed for h6 Tool Shanks

Cutter Shank	Tool Size Inch	SSER 16	SSER 20	SSER 25	SSER 32	SSER 40
3.0	0.1181	SSER16-M030	SSER20-M030	SSER25-M030	SSER32-M030	
4.0	0.1575	SSER16-M040	SSER20-M040	SSER25-M040	SSER32-M040	
5.0	0.1969	SSER16-M050	SSER20-M050	SSER25-M050	SSER32-M050	
6.0	0.2362	SSER16-M060	SSER20-M060	SSER25-M060	SSER32-M060	SSER40-M060
7.0	0.2756	SSER16-M070	SSER20-M070	SSER25-M070	SSER32-M070	SSER40-M070
8.0	0.3150	SSER16-M080	SSER20-M080	SSER25-M080	SSER32-M080	SSER40-M080
9.0	0.3543	SSER16-M090	SSER20-M090	SSER25-M090	SSER32-M090	SSER40-M090
10.0	0.3937	SSER16-M100	SSER20-M100	SSER25-M100	SSER32-M100	SSER40-M100
11.0	0.4331		SSER20-M110	SSER25-M110	SSER32-M110	SSER40-M110
12.0	0.4724		SSER20-M120	SSER25-M120	SSER32-M120	SSER40-M120
13.0	0.5118		SSER20-M130	SSER25-M130	SSER32-M130	SSER40-M130
14.0	0.5512			SSER25-M140	SSER32-M140	SSER40-M140
15.0	0.5906			SSER25-M150	SSER32-M150	SSER40-M150
16.0	0.6299			SSER25-M160	SSER32-M160	SSER40-M160
17.0	0.6693				SSER32-M170	SSER40-M170
18.0	0.7087				SSER32-M180	SSER40-M180
19.0	0.7480				SSER32-M190	SSER40-M190
20.0	0.7874				SSER32-M200	SSER40-M200
21.0	0.8268					SSER40-M210
22.0	0.8661					SSER40-M220
23.0	0.9055					SSER40-M230
24.0	0.9449					SSER40-M240
25.0	0.9843					SSER40-M250
26.0	1.0236					SSER40-M260

Jet-Blast SSER Coolant ER Collets

Features:

- High Pressure Coolant - 1,500 PSI
- Standard .0004" T.I.R.
- Designed for h6 Tool Shanks
- Add J to any SSER collet part number

Coolant thru standard collet slots create a loss in pressure and flow control, allowing coolant to fly everywhere. The Jet-Blast option for SSER forces the coolant into the Jet-Blast Ports maintaining pressure and directing the coolant down the flutes of the cutting tool.

ER Rigid Tap Collets - ANSI

Features

Special design locks tap flats into the collet slots preventing the tap from spinning inside the collet.

- ANSI Shank and Square Standard

Note:
Due to Multiple Standards for Metric Taps, the actual shank and square must be supplied to verify compatibility.

øShank	Square	Tap Size	TER16U	TER20U	TER25U	TER32U	TER40U
0.141	0.110	#6	TER16U-141	TER20U-141	TER25U-141	TER32U-141	TER40U-141
0.168	0.131	#8	TER16U-168	TER20U-168	TER25U-168	TER32U-168	TER40U-168
0.194	0.152	#10	TER16U-194	TER20U-194	TER25U-194	TER32U-194	TER40U-194
0.220	0.165	#12	TER16U-220	TER20U-220	TER25U-220	TER32U-220	TER40U-220
0.255	0.191	1/4"	TER16U-255	TER20U-255	TER25U-255	TER32U-255	TER40U-255
0.318	0.238	5/16"	TER16U-318	TER20U-318	TER25U-318	TER32U-318	TER40U-318
0.323	0.242	7/16"	TER16U-323	TER20U-323	TER25U-323	TER32U-323	TER40U-323
0.367	0.275	1/2"	TER16U-367	TER20U-367	TER25U-367	TER32U-367	TER40U-367
0.381	0.286	3/8"	TER16U-381	TER20U-381	TER25U-381	TER32U-381	TER40U-381
0.429	0.322	9/16"			TER25U-429	TER32U-429	TER40U-429
0.437	0.328	1/8" NPT			TER25U-437	TER32U-437	TER40U-437
0.480	0.360	5/8"			TER25U-480	TER32U-480	TER40U-480
0.542	0.406	11/16"				TER32U-542	TER40U-542
0.562	0.421	1/4" NPT				TER32U-562	TER40U-562
0.590	0.442	3/4"				TER32U-590	TER40U-590
0.652	0.489	13/16"				TER32U-652	TER40U-652
0.687	0.515	1/2" NPT					TER40U-687
0.697	0.523	7/8"					TER40U-697
0.700	0.531	3/8" NPT					TER40U-700
0.760	0.570	15/16"					TER40U-760
0.800	0.600	1"					TER40U-800

TER ANSI Collet Sets			Part Number
QTY	Sizes		
9	0.141—0.381	Tray	TER16U- SET9
9	0.141—0.381	Tray	TER20U- SET9
12	0.141—0.480	Tray	TER25U- SET12
16	0.141—0.652	Tray	TER32U- SET16
21	0.141—0.800	Tray	TER40U- SET21

ER Rigid Tap Collets - DIN

Features

Special design locks tap flats into the collet slots preventing the tap from spinning inside the collet.

- DIN Shank and Square Standard

Note:
Due to Multiple Standards for Metric Taps, the actual shank and square must be supplied to verify compatibility.

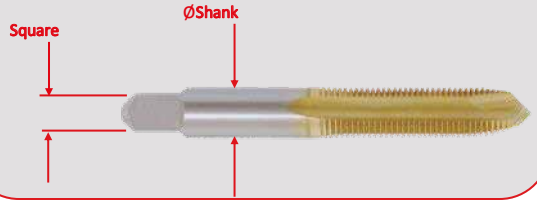

øShank	Inch	Square	Inch	TER16D	TER20D	TER25D	TER32D	TER40D
3.5	0.138	2.7	0.106	TER16D-035		TER25D-035		
4.0	0.157	3.0	0.118	TER16D-040	TER20D-040	TER25D-040		
4.5	0.177	3.4	0.134	TER16D-045	TER20D-045	TER25D-045	TER32D-045	
5.5	0.217	4.3	0.169	TER16D-055	TER20D-055	TER25D-055	TER32D-055	
6.0	0.236	4.9	0.193	TER16D-060	TER20D-060	TER25D-060	TER32D-060	TER40D-060
7.0	0.276	5.5	0.217	TER16D-070	TER20D-070	TER25D-070	TER32D-070	TER40D-070
8.0	0.315	6.2	0.244	TER16D-080	TER20D-080	TER25D-080	TER32D-080	TER40D-080
9.0	0.354	7.0	0.276	TER16D-090	TER20D-090	TER25D-090	TER32D-090	TER40D-090
10.0	0.394	8.0	0.315	TER16D-100	TER20D-100	TER25D-100	TER32D-100	TER40D-100
11.0	0.433	9.0	0.354			TER25D-110	TER32D-110	TER40D-110
12.0	0.472	9.0	0.354			TER25D-120	TER32D-120	TER40D-120
14.0	0.551	11.0	0.433			TER25D-140	TER32D-140	TER40D-140
16.0	0.630	12.0	0.472			TER25D-160	TER32D-160	TER40D-160
18.0	0.709	14.5	0.571				TER32D-180	TER40D-180
20.0	0.787	16.0	0.630				TER32D-200	TER40D-200
22.0	0.866	18.0	0.709					TER40D-220

ER Coolant Cap Collet Nuts

Features

- For coolant pressures up to 1,500 PSI.
- Fits standard ER collet chucks.
- Jet-Blast Caps Available Upon Request
- Uses SX Coolant Caps below and on the following page.
- Designed for use with standard ER collets

Nut Part Number	Description	Nut Diameter	Coolant Cap	Wrench Part Number	Thread	Max. Torque
ERN11-CC	ER 11 Nut - Hex	0.787 / 20mm	SXC06	ERW-11H	M14 x 0.75	18 ft/lbs Max
ERN16-CC	ER 16 Nut - Hex	1.102 / 28mm	SXC10	ERW-16H	M22 x 1.50	40 ft/lbs Max
ERN20-CC	ER 20 Nut - Hex	1.338 / 34mm	SXC16	ERW-20H	M25 x 1.50	60 ft/lbs Max
ERN25-CC	ER 25 Nut - E Type	1.654 / 42mm	SXC16	ERW-25	M32 x 1.50	75 ft/lbs Max
ERN32-CC	ER 32 Nut - E Type	1.969 / 50mm	SXC25	ERW-32	M40 x 1.50	100 ft/lbs Max
ERN40-CC	ER 40 Nut - E Type	2.480 / 63mm	SXC25	ERW-40	M50 x 1.50	125 ft/lbs Max

ER Coolant Caps - Inch

w/ Jet-Blast Option

Features

- O-ring seal for pressures up to 1500 PSI
- Prevents chips, dust & swarf from entering the holder
- Seal range +0 / -.50mm (+0 / -.020")
- Requires Coolant Cap Nut (See Previous Page)
- Jet Slot Available, Order by adding a "J" to the end of the Cap part number

Inch Shank		ER11	ER 16	ER 20	ER 25	ER 32	ER 40
1/8	0.1250	SXC06-0125	SXC10-0125	SXC16-0125	SXC16-0125	SXC25-0125	SXC25-0125
3/16	0.1875	SXC06-0187	SXC10-0187	SXC16-0187	SXC16-0187	SXC25-0187	SXC25-0187
1/4	0.2500	SXC06-0250	SXC10-0250	SXC16-0250	SXC16-0250	SXC25-0250	SXC25-0250
5/16	0.3125		SXC10-0312	SXC16-0312	SXC16-0312	SXC25-0312	SXC25-0312
3/8	0.3750		SXC10-0375	SXC16-0375	SXC16-0375	SXC25-0375	SXC25-0375
7/16	0.4375			SXC16-0437	SXC16-0437	SXC25-0437	SXC25-0437
1/2	0.5000			SXC16-0500	SXC16-0500	SXC25-0500	SXC25-0500
9/16	0.5625				SXC16-0562	SXC25-0562	SXC25-0562
5/8	0.6250				SXC16-0625	SXC25-0625	SXC25-0625
3/4	0.7500					SXC25-0750	SXC25-0750
7/8	0.8750						SXC25-0875
1"	1.0000						SXC25-M254

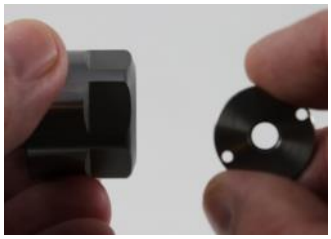

Thread Coolant Cap into ER nut, snug with wrench after the collet has been assembled.

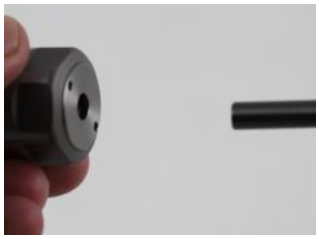

Insert cutting tool with the seal engaged on the round part of the shank

ER Coolant Caps - Metric

Features

- O-ring seal for pressures up to 1500 PSI
- Prevents chips, dust & swarf from entering the holder
- Seal range +0 / -.50mm (+0 / -.020")
- Requires Coolant Cap Nut (See Previous Page)
- Jet Slot Available, Order by adding a "J" to the end of the Cap part number

Range	Inch Shank	ER11	ER 16	ER 20	ER 25	ER 32	ER 40
1.0 - 0.7mm	1/32	SXC06-M010	SXC10-M010				
1.5 - 1.2mm	3/64	SXC06-M015	SXC10-M015				
2.0 - 1.5mm	1/16	SXC06-M020	SXC10-M020				
2.5 - 2.0mm	3/32	SXC06-M025	SXC10-M025				
3.0 - 2.5mm	7/64	SXC06-M030	SXC10-M030	SXC16-M030	SXC16-M030	SXC25-M030	SXC25-M030
3.5 - 3.0mm	1/8"	SXC06-M035	SXC10-M035	SXC16-M035	SXC16-M035	SXC25-M035	SXC25-M035
4.0 - 3.5mm	5/32"	SXC06-M040	SXC10-M040	SXC16-M040	SXC16-M040	SXC25-M040	SXC25-M040
4.5 - 4.0mm	11/64"	SXC06-M045	SXC10-M045	SXC16-M045	SXC16-M045	SXC25-M045	SXC25-M045
5.0 - 4.5mm	3/16"	SXC06-M050	SXC10-M050	SXC16-M050	SXC16-M050	SXC25-M050	SXC25-M050
5.5 - 5.0mm	13/64"	SXC06-M055	SXC10-M055	SXC16-M055	SXC16-M055	SXC25-M055	SXC25-M055
6.0 - 5.5mm	7/32"	SXC06-M060	SXC10-M060	SXC16-M060	SXC16-M060	SXC25-M060	SXC25-M060
6.5 - 6.0mm	1/4"		SXC10-M065	SXC16-M065	SXC16-M065	SXC25-M065	SXC25-M065
7.0 - 6.5mm	17/64"		SXC10-M070	SXC16-M070	SXC16-M070	SXC25-M070	SXC25-M070
7.5 - 7.0mm	9/32"		SXC10-M075	SXC16-M075	SXC16-M075	SXC25-M075	SXC25-M075
8.0 - 7.5mm	5/16"		SXC10-M080	SXC16-M080	SXC16-M080	SXC25-M080	SXC25-M080
8.5 - 8.0mm	21/64"		SXC10-M085	SXC16-M085	SXC16-M085	SXC25-M085	SXC25-M085
9.0 - 8.5mm	11/32"		SXC10-M090	SXC16-M090	SXC16-M090	SXC25-M090	SXC25-M090
9.5 - 9.0mm	3/8"		SXC10-M095	SXC16-M095	SXC16-M095	SXC25-M095	SXC25-M095
10.0 - 9.5mm	25/64"		SXC10-M100	SXC16-M100	SXC16-M100	SXC25-M100	SXC25-M100
10.5 - 10.0mm	13/32"			SXC16-M105	SXC16-M105	SXC25-M105	SXC25-M105
11.0 - 10.5mm	27/64"			SXC16-M110	SXC16-M110	SXC25-M110	SXC25-M110
11.5 - 11.0mm	7/16"			SXC16-M115	SXC16-M115	SXC25-M115	SXC25-M115
12.0 - 11.5mm	15/32"			SXC16-M120	SXC16-M120	SXC25-M120	SXC25-M120
12.5 - 12.0mm	31/64"			SXC16-M125	SXC16-M125	SXC25-M125	SXC25-M125
13.0 - 12.5mm	1/2"			SXC16-M130	SXC16-M130	SXC25-M130	SXC25-M130
13.5 - 13.0mm	17/32"				SXC16-M135	SXC25-M135	SXC25-M135
14.0 - 13.5mm	35/64"				SXC16-M140	SXC25-M140	SXC25-M140
14.5 - 14.0mm	9/16"				SXC16-M145	SXC25-M145	SXC25-M145
15.0 - 14.5mm	37/64"				SXC16-M150	SXC25-M150	SXC25-M150
15.5 - 15.0mm	19/32"				SXC16-M155	SXC25-M155	SXC25-M155
16.0 - 15.5mm	5/8"				SXC16-M160	SXC25-M160	SXC25-M160
16.5 - 16.0mm	41/64"					SXC25-M165	SXC25-M165
17.0 - 16.5mm	21/32"					SXC25-M170	SXC25-M170
17.5 - 17.0mm	11/16"					SXC25-M175	SXC25-M175
18.0 - 17.5mm	45/64"					SXC25-M180	SXC25-M180
18.5 - 18.0mm	23/32"					SXC25-M185	SXC25-M185
19.0 - 18.5mm	3/4"					SXC25-M190	SXC25-M190
19.5 - 19.0mm	49/64"					SXC25-M195	SXC25-M195
20.0 - 19.5mm	25/32"					SXC25-M200	SXC25-M200
20.5 - 20.0mm	51/64"						SXC25-M205
21.0 - 20.5mm	13/16"						SXC25-M210
21.5 - 21.0mm	27/32"						SXC25-M215
22.0 - 21.5mm	55/64"						SXC25-M220
22.5 - 22.0mm	7/8"						SXC25-M225
23.0 - 22.5mm	29/32"						SXC25-M230
23.5 - 23.0mm	59/64"						SXC25-M235
24.0 - 23.5mm	15/16"						SXC25-M240
24.5 - 24.0mm	61/64"						SXC25-M245
25.0 - 24.5mm	31/32"						SXC25-M250
25.4 - 25.0mm	1"						SXC25-M254

Building the Best EM in the Industry!

- 3 µm - 0.0001" Bore Runout Standard
- H5 Bore Tolerance Standard
- Coolant Thru Center Standard
- Dynamically Balanced Body for use @ 20,000 RPM's (CAT50 @ 15,000)
- Tapers are ground better than AT3 for optimal T.I.R.
- ID Chip Hole Standard
- Jet-Blast available on all projections

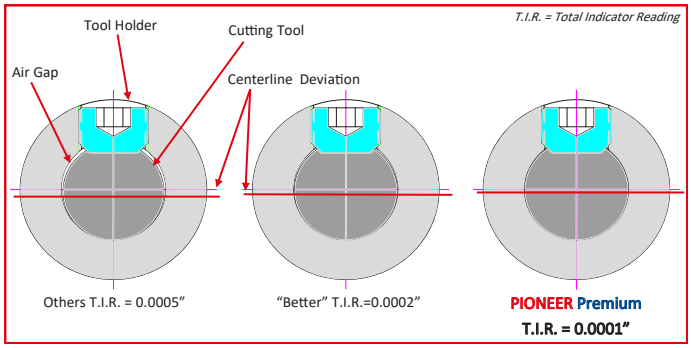

You lose 10% of cutter life for every 0.0001" of T.I.R.

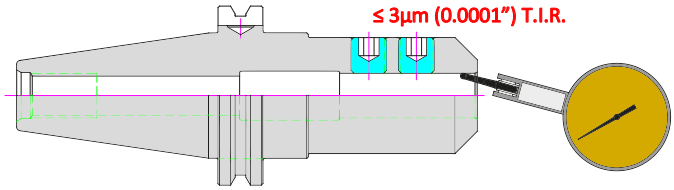

Standard Features

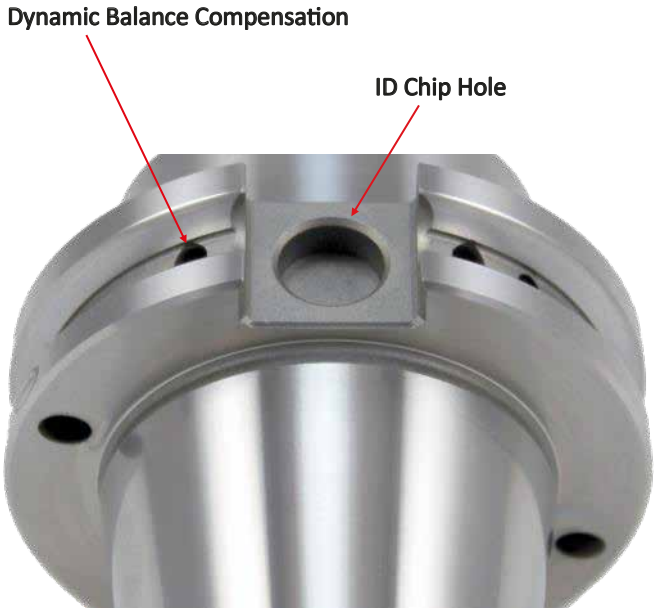

Jet-Blast Coolant Option

Jet-Blast Coolant Ports allow coolant to go around solid cutting tools and deliver coolant at the top of the cutting flutes.

The coolant ports are EDM beside the bore of the end mill holder intersecting the relief behind the ground bore. Coolant is fed from the center or from DIN-B Flange Coolant into the relief and around the cutting tool.

Jet-Blast is available in all holders with a 10" projection or shorter. Longer projections are a factory build and available upon request.

CAT40 & CAT40 End Mill Adapters

Features

- 3 µm - 0.0001" Bore Runout
- H5 Bore Tolerance or better
- Tapers are ground better than AT3 for optimal T.I.R.
- Coolant Thru
- Pre-Balanced for use @ 20,000 RPM

Optional (Order Separately):

- Jet-Blast (add "J" to the part number)
- DIN-B Coolant (Select models)

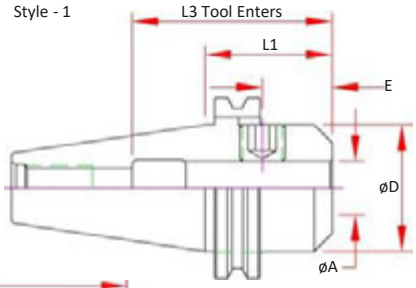

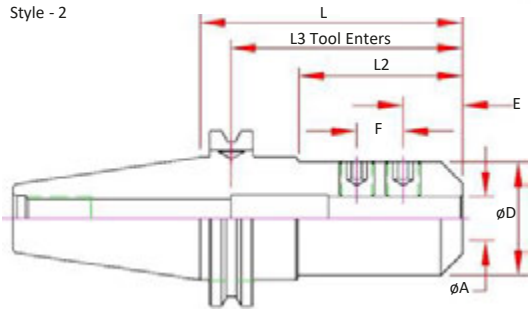

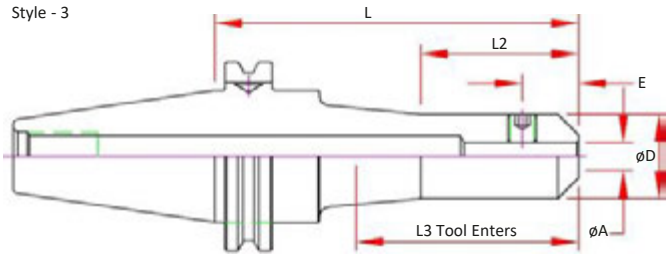


P-134

	Dual Contact Spindle Part Number	Standard Spindle Part Number	A Bore	D	E	L Projection	L2	L3 Max. Tool Enters	Screw Number	Style
1/8		CAT40-EM012-0175	0.1250	0.69	0.19	1.75	0.80	3.32	3	1
		CAT40-EM012-0250				2.50	0.92	4.07		2
		CAT40-EM012-0400				4.00	2.42	5.57		2
		CAT40-EM012-0500				5.00	1.57	6.57		3
		CAT40-EM012-0600				6.00	1.57	7.57		3
3/16		CAT40-EM018-0175	0.1875	0.69	0.44	1.75	0.88	3.32	3	1
		CAT40-EM018-0250				2.50	0.92	4.07		2
		CAT40-EM018-0400				4.00	2.42	5.57		2
		CAT40-EM018-0600				6.00	2.50	7.57		3
1/4		CAT40-EM025-0175	0.2500	0.78	0.44	1.75	0.80	3.32	4	1
		CAT40-EM025-0250				2.50	0.92	4.07		2
		CAT40-EM025-0400				4.00	2.42	5.57		2
		CAT40-EM025-0500				5.00	2.50	6.57		3
		CAT40-EM025-0600				6.00	2.50	7.57		3
		CAT40-EM025-0900				9.00	2.50	10.57		3
5/16		CAT40-EM031-0175	0.3125	0.88	0.44	1.75	0.88	3.32	4	1
		CAT40-EM031-0250				2.50	0.92	4.07		2
		CAT40-EM031-0400				4.00	2.42	5.57		2
		CAT40-EM031-0600				6.00	3.00	7.57		3
3/8		CAT40-EM037-0175	0.3750	1.00	0.75	1.75	0.88	4.07	5	1
	CAT40-EM037-0250-B	CAT40-EM037-0250				2.50	1.00	4.07		2
	CAT40-EM037-0400-B	CAT40-EM037-0400				4.00	2.50	5.57		2
		CAT40-EM037-0450				4.50	1.00	6.07		3
		CAT40-EM037-0500				5.00	1.00	6.57		3
	CAT40-EM037-0600-B	CAT40-EM037-0600				6.00	2.50	7.57		3
		CAT40-EM037-0900				9.00	2.50	10.57		3
7/16		CAT40-EM043-0250	0.4375	1.25	0.75	2.50	1.00	4.07	5	2
1/2	CAT40-EM050-0175-B	CAT40-EM050-0175	0.5000	1.75	0.88	1.75	0.96	3.07	6	1
	CAT40-EM050-0250-B	CAT40-EM050-0250		1.25		2.50	1.00	3.07		2
		CAT40-EM050-0262		1.25		2.62	1.12	3.07		2
	CAT40-EM050-0400-B	CAT40-EM050-0400		1.25		4.00	2.58	3.07		2
		CAT40-EM050-0462		1.25		4.62	3.20	3.07		2
		CAT40-EM050-0500		1.25		5.00	3.50	3.07		2
	CAT40-EM050-0600-B	CAT40-EM050-0600		1.25		6.00	3.00	3.07		3
		CAT40-EM050-0900		1.25		9.00	3.00	3.07		3

CAT40 & CAT40 End Mill Adapters

Features

- 3 µm - 0.0001" Bore Runout
- H5 Bore Tolerance or better
- Tapers are ground better than AT3 for optimal T.I.R.
- Coolant Thru
- Pre-Balanced for use @ 20,000 RPM

Optional (Order Separately):

- Jet-Blast (add "J" to the part number)
- DIN-B Coolant (Select models)

Style - 1

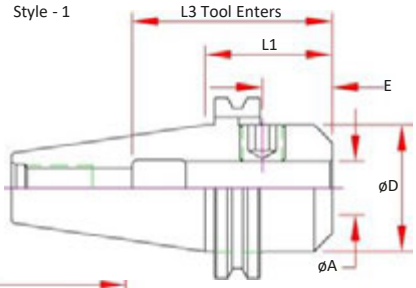

Style - 2

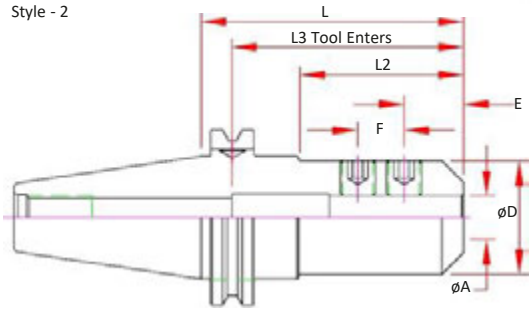

P-134

Style - 3

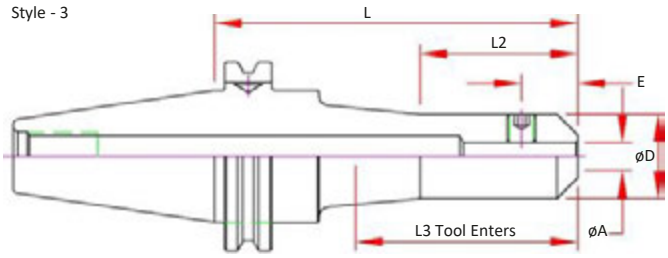

	Dual Contact Spindle Part Number	Standard Spindle Part Number	A Bore	D	E	F	L Projection	L2	L3 Max. Tool Enters	Screw Number	Style
5/8	CAT40-EM062-0175-B	CAT40-EM062-0175	0.6250	1.75	0.94	-	1.75	0.95	3.25	7	1
	CAT40-EM062-0250-B	CAT40-EM062-0250		1.50			2.50	1.70	3.62		2
		CAT40-EM062-0300		1.50			3.00	1.50	3.50		2
	CAT40-EM062-0400-B	CAT40-EM062-0400		1.50			4.00	2.50	3.50		2
		CAT40-EM062-0500		1.50			5.00	3.50	3.50		2
	CAT40-EM062-0600-B	CAT40-EM062-0600		1.50			6.00	4.50	3.50		2
3/4	CAT40-EM075-0175-B	CAT40-EM075-0175	0.7500	1.75	1.00	-	1.75	0.95	3.23	8	1
	CAT40-EM075-0250-B	CAT40-EM075-0250					2.50	1.70	3.94		2
		CAT40-EM075-0300					3.00	2.20	3.94		2
		CAT40-EM075-0350					3.50	2.70	3.94		2
	CAT40-EM075-0400-B	CAT40-EM075-0400					4.00	3.20	3.94		2
		CAT40-EM075-0500					5.00	4.20	3.94		2
	CAT40-EM075-0600-B	CAT40-EM075-0600					6.00	5.20	3.94		2
		CAT40-EM075-0900					9.00	8.20	3.94		2
7/8		CAT40-EM087-0175	0.8750	1.75	1.00	-	1.75	0.95	2.38	8	1
		CAT40-EM087-0350		1.75		0.81	3.50	2.70	4.25		2
		CAT40-EM087-0600		1.88		0.81	6.00	5.24	4.25		2
1	CAT40-EM100-0175-B	CAT40-EM100-0175	1.0000	1.75	1.12	-	1.75	0.95	2.38	9	1
	CAT40-EM100-0300-B	CAT40-EM100-0300		2.00		1.00	3.00	2.24	3.15	9 & 10	2
	CAT40-EM100-0400-B	CAT40-EM100-0400		2.00		1.00	4.00	3.24	4.50	(2) 10	2
		CAT40-EM100-0500		2.00		1.00	5.00	4.24	4.50	(2) 10	2
		CAT40-EM100-0600		2.00		1.00	6.00	5.24	4.50	(2) 10	2
		CAT40-EM100-0900		2.00		1.00	9.00	8.24	4.50	(2) 10	2
1 1/4	CAT40-EM125-0200-B**	CAT40-EM125-0200**	1.2500	2.25**	1.12	-	2.00	1.20	2.38	9	1
	CAT40-EM125-0400-B	CAT40-EM125-0400		2.50		1.00	4.00	3.24	3.54	(2) 11	2
		CAT40-EM125-0425		2.50		1.00	4.25	3.49	3.54	(2) 11	2
	CAT40-EM125-0600-B	CAT40-EM125-0600		2.50		1.00	6.00	5.24	3.54	(2) 11	2
1 1/2	CAT40-EM150-0400-B	CAT40-EM150-0400	1.5000	2.62	1.12	1.00	4.00	3.24	2.52	(2) 11	2
	CAT40-EM150-0462-B	CAT40-EM150-0462				1.00	4.62	3.86	2.52	(2) 11	2
		CAT40-EM150-0600				1.00	6.00	5.24	3.15	(2) 11	2

*** No DIN AD+B Option Available - No ANSI Safety Area due to bore size - Will not tool change in Heavy Duty or Umbrella style tool changers & Alarm*

CAT50 & CAT50 End Mill Adapters

Features

- 3 µm - 0.0001" Bore Runout
- H5 Bore Tolerance or better
- Tapers are ground better than AT3 for optimal T.I.R.
- Coolant Thru
- Pre-Balanced for use @ 15,000 RPM

Optional (Order Separately):

- Jet-Blast (add "J" to the part number)
- DIN-B Coolant (Select models)

Style - 1

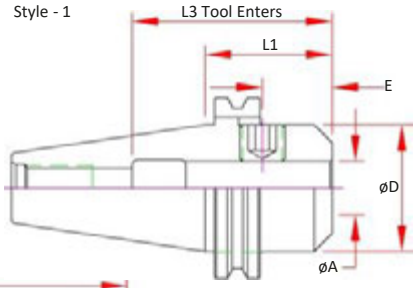

Style - 2

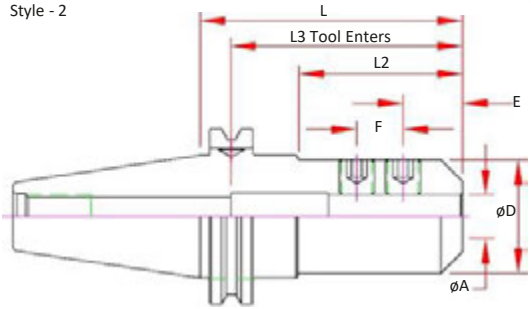

Style - 3

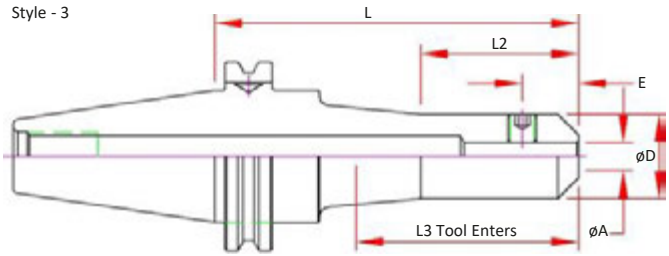

P-134

	Dual Contact Spindle Part Number	Standard Spindle Part Number	A Bore	D	E	F	L Projection	L2	L3 Max. Tool Enters	Screw Number	Style
1/8		CAT50-EM012-0250	0.1250	0.69	0.19	-	2.50	0.92	4.75	3	2
		CAT50-EM012-0531					5.31	1.57	7.56		3
3/16		CAT50-EM018-0250	0.1875	0.69	0.44	-	2.50	0.92	4.75	3	2
		CAT50-EM018-0531					5.31	1.57	7.56		3
1/4		CAT50-EM025-0250	0.2500	0.79	0.44	-	2.50	0.92	4.75	4	2
		CAT50-EM025-0400					4.00	2.42	6.25		2
		CAT50-EM025-0531					5.31	1.57	7.56		3
		CAT50-EM025-0600					6.00	1.57	8.25		3
5/16		CAT50-EM031-0250	0.3125	0.88	0.44	-	2.50	1.00	4.75	4	2
		CAT50-EM031-0400					4.00	2.42	6.25		2
		CAT50-EM031-0531					5.31	1.57	7.56		3
		CAT50-EM031-0600					6.00	1.57	8.25		3
3/8		CAT50-EM037-0250	0.3750	1.00	0.75	-	2.50	1.00	4.75	5	2
		CAT50-EM037-0300					3.00	1.42	5.25		2
		CAT50-EM037-0400					4.00	2.42	6.25		2
		CAT50-EM037-0450					4.50	2.92	6.75		2
		CAT50-EM037-0600					6.00	3.00	8.25		3
		CAT50-EM037-0650					6.50	3.00	8.75		3
		CAT50-EM037-0800					8.00	3.00	10.25		3
	CAT50-EM037-1000-B	CAT50-EM037-1000					10.00	3.00	12.25		3
		CAT50-EM037-1200					12.00	3.00	14.25		3
		CAT50-EM037-1500					15.00	3.00	17.25		3
7/16		CAT50-EM043-0262	0.4375	1.25	0.88	-	2.62	1.12	4.87	5	2
		CAT50-EM043-0400					4.00	2.42	6.25		2
		CAT50-EM043-0600					6.00	1.96	8.25		3
1/2		CAT50-EM050-0262	0.5000	1.25	0.88	-	2.62	1.20	4.87	6	2
		CAT50-EM050-0300					3.00	1.42	5.25		2
	CAT50-EM050-0400-B	CAT50-EM050-0400					4.00	2.42	6.25		2
		CAT50-EM050-0462					4.62	3.04	6.87		2
	CAT50-EM050-0600-B	CAT50-EM050-0600					6.00	3.13	8.25		3
		CAT50-EM050-0662					6.62	3.13	8.87		3
	CAT50-EM050-0800-B	CAT50-EM050-0800					8.00	3.13	10.25		3
		CAT50-EM050-1000					10.00	3.13	12.25		3
	CAT50-EM050-1200-B	CAT50-EM050-1200					12.00	3.13	14.25		3
	CAT50-EM050-1500-B	CAT50-EM050-1500					15.00	3.13	17.25		3
9/16		CAT50-EM056-0262	0.5625	1.50	0.88	-	2.62	1.12	4.87	6	2
5/8		CAT50-EM062-0300	0.6250	1.50	0.94	-	3.00	1.50	5.25	7	2
		CAT50-EM062-0375					3.75	2.25	6.00		2
	CAT50-EM062-0400-B	CAT50-EM062-0400					4.00	2.50	6.25		2

CAT50 & CAT50 End Mill Adapters

Features

- 3 µm - 0.0001" Bore Runout
- H5 Bore Tolerance or better
- Tapers are ground better than AT3 for optimal T.I.R.
- Coolant Thru
- Pre-Balanced for use @ 15,000 RPM

Optional (Order Separately):

- Jet-Blast (add "J" to the part number)
- DIN-B Coolant (Select models)

Style - 1

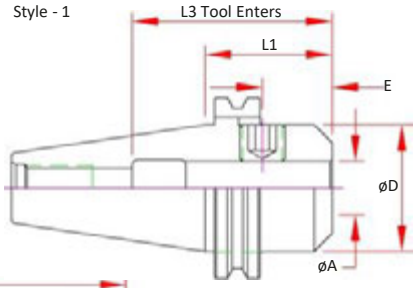

Style - 2

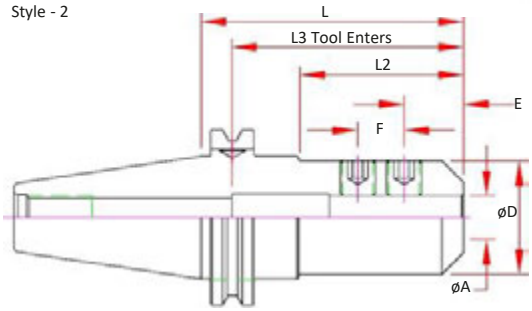

Style - 3

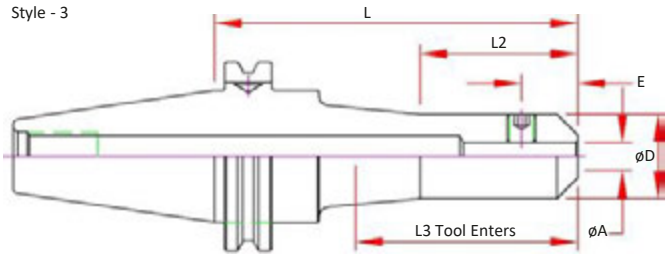

P-134

	Dual Contact Spindle Part Number	Standard Spindle Part Number	A Bore	D	E	F	L Projection	L2	L3 Max. Tool Enters	Screw Number	Style
5/8	CAT50-EM062-0600-B	CAT50-EM062-0600	0.6250	1.50	0.94	-	6.00	4.42	8.25	7	2
	CAT50-EM062-0775-B	CAT50-EM062-0775					7.75	4.25	10.00		3
3/4		CAT50-EM075-0175	0.7500	1.75	1.00	-	1.75	0.25	2.76	8	1
	CAT50-EM075-0300-B	CAT50-EM075-0300					3.00	1.50	3.86		2
		CAT50-EM075-0375					3.75	2.25	4.00		2
	CAT50-EM075-0400-B	CAT50-EM075-0400					4.00	2.50	3.94		2
		CAT50-EM075-0575					5.75	4.17	3.94		2
	CAT50-EM075-0600-B	CAT50-EM075-0600					6.00	1.96	3.94		3
	CAT50-EM075-0800-B	CAT50-EM075-0800					8.00	1.96	3.94		3
	CAT50-EM075-1000-B	CAT50-EM075-1000					10.00	1.96	3.94		3
	CAT50-EM075-1200-B	CAT50-EM075-1200					12.00	1.96	3.94		3
	CAT50-EM075-1500-B	CAT50-EM075-1500					15.00	1.96	N/A		3
7/8		CAT50-EM087-0350	0.8750	1.88	1.00	0.81	3.50	2.00	4.19	8	2
		CAT50-EM087-0600					6.00	4.42	4.06		2
		CAT50-EM087-0775					7.75	6.17	4.06		2
1		CAT50-EM100-0162	1.0000	2.75	1.12	-	1.62	0.62	2.50	10	1
		CAT50-EM100-0300		2.00	1.12	-	3.00	1.50	4.44	10	2
	CAT50-EM100-0400-B	CAT50-EM100-0400			1.12	1.00	4.00	2.54	4.44	(2) 10	2
	CAT50-EM100-0600-B	CAT50-EM100-0600			1.12	1.00	6.00	4.50	4.44	(2) 10	2
	CAT50-EM100-0800-B	CAT50-EM100-0800			1.12	1.00	8.00	6.50	4.44	(2) 10	2
	CAT50-EM100-1000-B	CAT50-EM100-1000			1.12	1.00	10.00	4.50	4.44	(2) 10	3
	CAT50-EM100-1200-B				1.12	1.00	12.00	4.50	4.44	(2) 10	3
1 1/4		CAT50-EM125-0200	1.2500	2.75	1.50	-	2.00	1.20	3.50	11	1
		CAT50-EM125-0300			1.12	1.00	3.00	2.20	3.50	(2) 11	1
	CAT50-EM125-0400-B	CAT50-EM125-0400		2.50	1.12	1.00	4.00	2.58	3.35	(2) 11	2
	CAT50-EM125-0600-B	CAT50-EM125-0600			1.12	1.00	6.00	4.58	3.35	(2) 11	2
	CAT50-EM125-0800-B	CAT50-EM125-0800			1.12	1.00	8.00	6.58	3.35	(2) 11	2
	CAT50-EM125-1000-B	CAT50-EM125-1000			1.12	1.00	10.00	8.58	3.35	(2) 11	2
1 1/2		CAT50-EM150-0225	1.5000	2.75	1.50	-	2.25	1.45	2.44	11	1
	CAT50-EM150-0400-B	CAT50-EM150-0400			1.12	1.00	4.00	3.20	4.50	(2) 11	2
	CAT50-EM150-0600-B	CAT50-EM150-0600			1.12	1.00	6.00	5.20	4.50	(2) 11	2
	CAT50-EM150-0800-B	CAT50-EM150-0800			1.12	1.00	8.00	7.20	4.50	(2) 11	2
	CAT50-EM150-1000-B	CAT50-EM150-1000			1.12	1.00	10.00	9.20	4.50	(2) 11	2
2		CAT50-EM200-0362 **	2.0000	3.75	1.41	1.50	3.62	2.82	3.66	12 & 13	2
	CAT50-EM200-0562-B	CAT50-EM200-0562					5.62	4.86	4.13	(2) 13	2
		CAT50-EM200-0800					8.00	7.24	4.13	(2) 13	2
		CAT50-EM200-1000					10.00	9.24	4.13	(2) 13	2
2 1/2	CAT50-EM250-0650-B	CAT50-EM250-0650	2.5000	4.00	1.50	1.56	6.50	5.74	4.00	(2) 13	2

*** No DIN AD+B Option Available - No ANSI Safety Area due to bore size. Check Tool Change Clearance prior to ordering.*

CAT End Mill Adapters—Metric

Features

- 3 µm - 0.0001" Bore Runout
- H5 Bore Tolerance or better
- Tapers are ground better than AT3 for optimal T.I.R.
- Coolant Thru
- Pre-Balanced for use @ 20,000 RPM (CAT50 @ 15,000 RPM)

Optional (Order Separately):

- Jet-Blast (add "J" to the part number)
- DIN-B Coolant (Select models)

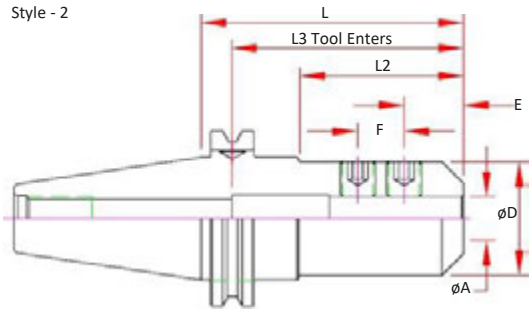


P-134

CAT40

Part Number	A Bore	D	E	F	L Projection	L2	L3 Max. Tool Enters	Screw #	Style
CAT40-EMM06-0250	6mm	0.78	0.38	-	2.50	0.93	4.06	4	2
CAT40-EMM08-0250	8mm	0.88	0.44	-	2.50	1.00	4.06	4	2
CAT40-EMM10-0250	10mm	1.00	0.75	-	2.50	1.00	4.06	5	2
CAT40-EMM12-0250	12mm	1.25	0.87	-	2.50	1.00	4.06	6	2
CAT40-EMM14-0250	14mm	1.50	0.87	-	2.50	1.73	3.50	6	2
CAT40-EMM16-0250	16mm	1.50	0.94	-	2.50	1.73	3.94	7	2
CAT40-EMM18-0250	18mm	1.75	0.94	-	2.50	1.73	3.94	8	2
CAT40-EMM20-0250	20mm	1.75	1.00	-	2.50	1.73	3.94	8	2
CAT40-EMM25-0300	25mm	2.00	0.94	0.98	3.00	2.25	3.15	(2) 10	2
CAT40-EMM32-0400	32mm	2.50	0.94	1.10	4.00	2.25	3.54	(2) 11	2

CAT50

Dual Contact Spindle Part Number	Standard Spindle Part Number	A Bore	D	E	F	L Projection	L2	L3 Max. Tool Enters	Screw #	Style
	CAT50-EMM06-0400	6mm	0.78	0.38	-	4.00	2.43	6.25	4	2
	CAT50-EMM08-0400	8mm	0.88	0.44	-	4.00	2.43	6.25	4	2
	CAT50-EMM10-0400	10mm	1.00	0.75	-	4.00	2.43	6.25	5	2
	CAT50-EMM12-0400	12mm	1.25	0.87	-	4.00	2.43	6.25	6	2
	CAT50-EMM14-0400	14mm	1.50	0.87	-	4.00	2.50	6.25	6	2
	CAT50-EMM16-0400	16mm	1.50	0.94	-	4.00	2.50	6.25	7	2
	CAT50-EMM18-0400	18mm	1.75	0.94	-	4.00	2.50	6.25	8	2
	CAT50-EMM20-0400	20mm	1.75	1	-	4.00	2.5	6.25	8	2
CAT50-EMM25-0400-B	CAT50-EMM25-0400	25mm	2.00	0.94	0.98	4.00	2.50	4.45	(2) 10	2
CAT50-EMM32-0400-B	CAT50-EMM32-0400	32mm	2.50	0.94	1.10	4.00	2.50	3.35	(2) 11	2

HSK End Mill Adapters

Features

- 3 µm - 0.0001" Bore Runout
- H5 Bore Tolerance or better
- Coolant Thru
- Pre-Balanced for use @ 20,000 RPM (HSK100A @ 15,000 RPM)

Optional (Order Separately):

- Jet-Blast (add "J" to the part number)

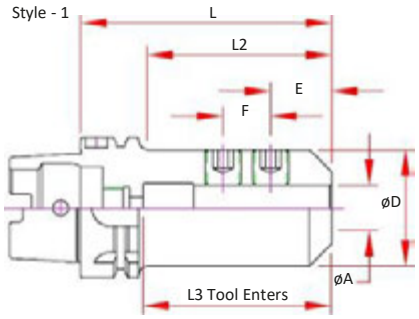

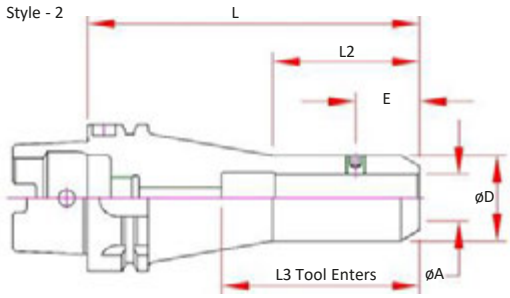

HSK063A

Part Number	A Bore	D	E	F	L Projection	L2	L3 Max. Tool Enters	Screw Number	Style
HSK063A-EM012-0250	0.1250	0.69	0.19	-	2.50	1.28	1.63	3	1
HSK063A-EM018-0250	0.1875	0.69	0.44	-	2.50	1.28	1.63	3	1
HSK063A-EM025-0250	0.2500	0.78	0.44	-	2.50	1.28	1.63	4	1
HSK063A-EM031-0250	0.3125	0.88	0.44	-	2.50	1.28	1.63	4	1
HSK063A-EM037-0250	0.3750	1.00	0.75	-	2.50	1.28	1.50	5	1
HSK063A-EM050-0315	0.5000	1.25	0.88	-	3.15	1.93	2.10	6	1
HSK063A-EM062-0315	0.6250	1.50	0.94	-	3.15	1.93	2.10	7	1
HSK063A-EM075-0315	0.7500	1.75	1.00	-	3.15	2.08	1.97	8	1
HSK063A-EM100-0400	1.0000	2.00	1.12	1.00	4.00	2.94	2.95	(2) 10	1
HSK063A-EM125-0435	1.2500	2.50	1.12	1.00	4.35	3.32	3.23	(2) 11	1

HSK100A

Part Number	A Bore	D	E	F	L Projection	L2	L3 Max. Tool Enters	Screw Number	Style
HSK100A-EM037-0400	0.3750	1.00	0.75	-	4.00	2.85	3.37	5	1
HSK100A-EM037-0600					6.00	3.00	5.37		2
HSK100A-EM050-0400	0.5000	1.25	0.88	-	4.00	2.85	2.56	6	1
HSK100A-EM050-0600					6.00	3.13	3.07		2
HSK100A-EM050-0800					8.00	3.13	3.07		2
HSK100A-EM062-0400	0.6250	1.50	0.94	-	4.00	2.85	2.56	7	1
HSK100A-EM062-0600					6.00	4.85	3.50		1
HSK100A-EM075-0400	0.7500	1.75	1.00	-	4.00	2.85	2.56	8	1
HSK100A-EM075-0600					6.00	1.97	4.00		2
HSK100A-EM075-0800					8.00	1.97	4.00		2
HSK100A-EM100-0400	1.0000	2.56	1.12	1.00	4.00	2.85	2.70	(2) 10	1
HSK100A-EM100-0600					6.00	4.85	4.50		1
HSK100A-EM100-0800					8.00	6.85	4.50		1
HSK100A-EM125-0400	1.2500	2.81	1.12	1.00	4.00	2.85	2.81	(2) 11	1
HSK100A-EM125-0600					6.00	4.85	3.23		1
HSK100A-EM125-0800					8.00	6.85	3.23		1
HSK100A-EM150-0450	1.5000	2.75	1.12	1.00	4.50	3.35	3.26	(2) 11	1
HSK100A-EM150-0600					6.00	5.35	3.26		1
HSK100A-EM200-0550	2.0000	3.75	1.41	1.50	5.50	4.35	4.13	(2) 13	1

BT30 End Mill Adapters

Features

- 3 µm - 0.0001" Bore Runout
- H5 Bore Tolerance or better
- Tapers are ground better than AT3 for optimal T.I.R.
- Coolant Thru
- Pre-Balanced for use @ 20,000 RPM

Optional (Order Separately):

- Jet-Blast (add "J" to the part number)

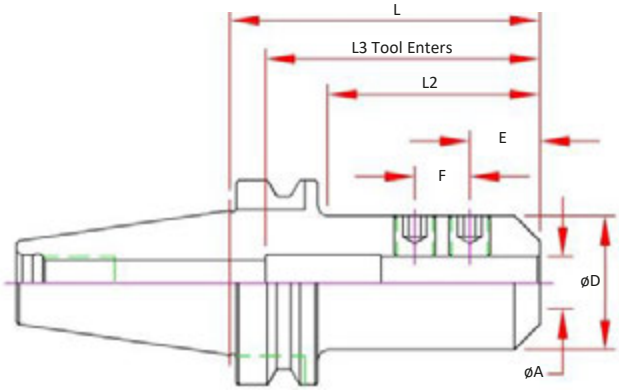


P-134

	Dual Contact Spindle Part Number	Standard Spindle Part Number	A Bore	D	E	F	L Projection	L2	L3 Max. Tool Enters	Screw Number
1/8	BT30-EM012-0236-B	BT30-EM012-0236	0.1250	0.69	0.38	-	2.36	1.37	3.32	3
	BT30-EM012-0400-B	BT30-EM012-0400					4.00	3.00	4.96	
3/16	BT30-EM018-0236-B	BT30-EM018-0236	0.1875	0.69	0.50	-	2.36	1.37	3.32	4
	BT30-EM018-0400-B	BT30-EM018-0400					4.00	3.00	4.96	
1/4	BT30-EM025-0236-B	BT30-EM025-0236	0.2500	0.78	0.38	-	2.36	1.37	3.32	4
	BT30-EM025-0400-B	BT30-EM025-0400					4.00	3.00	4.96	
5/16	BT30-EM031-0236-B	BT30-EM031-0236	0.3125	0.88	0.60	-	2.36	1.37	3.32	4-BT30
		BT30-EM031-0400					4.00	3.00	2.96	
3/8	BT30-EM037-0236-B	BT30-EM037-0236	0.3750	1.00	0.75	-	2.36	1.37	2.36	5
	BT30-EM037-0400-B	BT30-EM037-0400					4.00	3.00	2.36	
1/2	BT30-EM050-0236-B	BT30-EM050-0236	0.5000	1.25	0.88	-	2.36	1.37	2.56	6
	BT30-EM050-0400-B	BT30-EM050-0400					4.00	3.00	2.56	
5/8	BT30-EM062-0236-B	BT30-EM062-0236	0.6250	1.50	0.94	-	2.36	1.37	2.25	7
		BT30-EM062-0400					4.00	3.00	2.25	
3/4	BT30-EM075-0236-B	BT30-EM075-0236	0.7500	1.75	1.00	-	2.36	1.57	2.56	8
	BT30-EM075-0400-B	BT30-EM075-0400					4.00	3.21	2.56	
7/8	BT30-EM087-0354-B	BT30-EM087-0354	0.8750	1.75	1.00	0.81	3.54	2.75	3.15	(2) 8
1	BT30-EM100-0275-B	BT30-EM100-0275	1.0000	2.00	1.12	-	2.75	1.96	2.50	10

BT40 End Mill Adapters

Features

- 3 µm - 0.0001" Bore Runout
- H5 Bore Tolerance or better
- Tapers are ground better than AT3 for optimal T.I.R.
- Coolant Thru
- Pre-Balanced for use @ 20,000 RPM

Optional (Order Separately):

- Jet-Blast (add "J" to the part number)
- DIN-B Coolant (Select models)

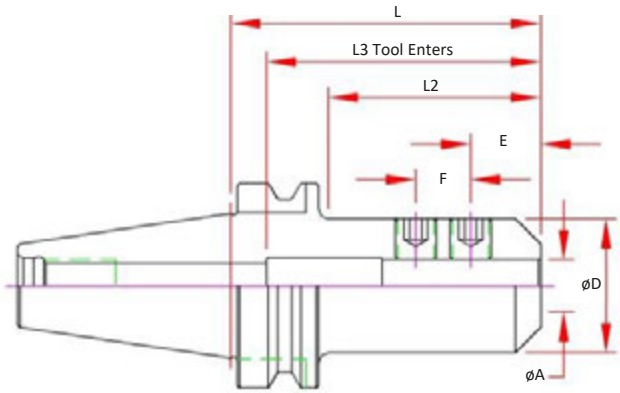


P-134

	Dual Contact Spindle Part Number	Standard Spindle Part Number	A Bore	D	E	F	L Projection	L2	L3 Max. Tool Enters	Screw Number
1/8		BT40-EM012-0250	0.1250	0.69	0.19	-	2.50	1.31	3.89	3
		BT40-EM012-0400					4.00	1.00	5.39	
3/16		BT40-EM018-0250	0.1875	0.69	0.44	-	2.50	1.31	3.89	4
		BT40-EM018-0400					4.00	2.81	5.39	
1/4		BT40-EM025-0250	0.2500	0.78	0.44	-	2.50	1.31	3.89	4
		BT40-EM025-0400					4.00	2.81	5.39	
		BT40-EM025-0600					6.00	2.50	7.39	
5/16		BT40-EM031-0250	0.3125	0.88	0.44	-	2.50	1.31	3.89	4
		BT40-EM031-0400					4.00	2.81	5.41	
3/8	BT40-EM037-0250-B	BT40-EM037-0250	0.3750	1.00	0.75	-	2.50	1.31	3.89	5
	BT40-EM037-0400-B	BT40-EM037-0400					4.00	2.81	5.39	
		BT40-EM037-0600					6.00	2.50	7.39	
1/2	BT40-EM050-0250-B	BT40-EM050-0250	0.5000	1.25	0.88	-	2.50	1.31	2.56	6
	BT40-EM050-0400-B	BT40-EM050-0400					4.00	2.81	2.56	
	BT40-EM050-0600-B	BT40-EM050-0600					6.00	2.50	2.56	
5/8	BT40-EM062-0250-B	BT40-EM062-0250	0.6250	1.50	0.94	-	2.50	1.31	3.50	7
	BT40-EM062-0400-B	BT40-EM062-0400					4.00	2.81	3.50	
	BT40-EM062-0600-B	BT40-EM062-0600					6.00	4.81	3.50	
3/4		BT40-EM075-0175	0.7500	1.75	1.00	-	1.75	0.56	2.38	8
	BT40-EM075-0250-B	BT40-EM075-0250					2.50	1.31	2.38	
	BT40-EM075-0400-B	BT40-EM075-0400					4.00	2.81	4.00	
	BT40-EM075-0600-B	BT40-EM075-0600					6.00	4.81	4.00	
7/8		BT40-EM087-0335	0.8750	1.88	1.00	0.81	3.35	2.28	4.18	8
		BT40-EM087-0500					5.00	3.93	4.18	
1	BT40-EM100-0200-B	BT40-EM100-0200	1.0000	2.00	1.12	-	2.00	0.97	2.38	10
		BT40-EM100-0300				-	3.00	1.97	3.15	10
	BT40-EM100-0400-B	BT40-EM100-0400				1.00	4.00	2.97	4.44	(2) 10
		BT40-EM100-0600				1.00	6.00	4.97	4.44	(2) 10
1 1/4	BT40-EM125-0200-B	BT40-EM125-0200	1.2500	2.25	1.12	-	2.00	0.97	2.36	9
	BT40-EM125-0356-B	BT40-EM125-0356				1.00	3.56	2.57	3.54	(2) 11
	BT40-EM125-0600-B	BT40-EM125-0600				1.12	6.00	5.00	3.54	(2) 11
1 1/2	BT40-EM150-0433-B	BT40-EM150-0433	1.5000	2.62	1.12	1.00	4.33	3.34	2.52	(2) 11

Straight Shank End Mill Adapters

Features

- 3 µm - 0.0001" Bore Runout
- H5 Bore Tolerance or better
- Coolant Thru

Optional (Order Separately):

- Jet-Blast (add "J" to the part number)

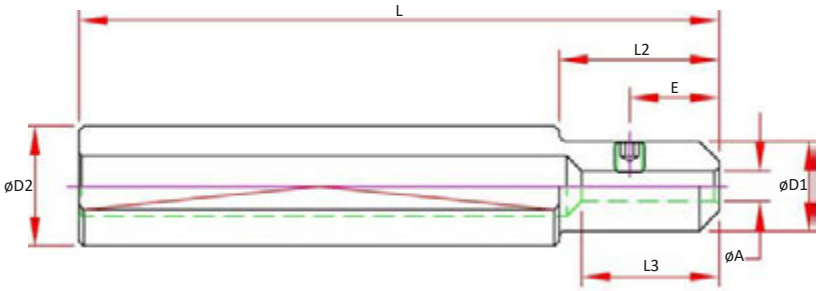

	Part Number	A	D1	D2	E	L Length	L2	L3 Max. Tool Enters	Screw Number
1/8	S075-EM012-0600	0.1250	0.50	0.7500	0.19	6.00	2.00	6.00	1
3/16	S075-EM018-0600	0.1875	0.56		0.44		2.00		2
1/4	S075-EM025-0600	0.2500	0.75		0.59		-		4
5/16	S075-EM031-0600	0.3125	0.75		0.44		-		4
3/8	S100-EM037-0600	0.3750	1.00	1.0000	0.75		-		5
1/2	S100-EM050-0600	0.5000	1.00		0.39 & 0.98		-		(2) 4

Control Point End Mill Adapter Screws

- Ground control point for angular locking
- Use holder part number to verify screw size and length

Screw Number	Part Number	End Mill Bore Size	Thread	OD Screw	Length	Hex	Max. Torque ft/lbs
1	SCW-EM01	1/8	#6-32	0.14	0.19	1/16	1
2	SCW-EM02	3/16	#8-32	0.16	0.19	5/64	2
3	SCW-EM03	1/8	#10-32	0.19	0.25	3/32	3
4	SCW-EM04	3/16, 1/4, 5/16, 6mm, 8mm	1/4-28	0.25	0.25	1/8	4
4-BT30	SCW-EM04-BT30	BT30-EM031, 5/16	5/16-24	0.31	0.31	1/8	6
5	SCW-EM05	3/8, 7/16, 10mm	3/8-24	0.38	0.31	3/16	12
6	SCW-EM06	1/2, 12mm, 14mm	7/16-20	0.44	0.37	7/32	17
7	SCW-EM07	5/8, 16mm, 18mm	9/16-18	0.56	0.50	9/32	31
8	SCW-EM08	3/4, 7/8, 20mm	5/8-18	0.63	0.50	5/16	48
9	SCW-EM09	1", 1-1/4 STUB, 25mm	3/4-16	0.75	0.37	3/8	69
10	SCW-EM10	1", 1-1/4, 1-1/2, 25mm	3/4-16	0.75	0.50	3/8	69
11	SCW-EM11	1", 1-1/4, 1-1/2, 32mm	3/4-16	0.75	0.62	3/8	69
12	SCW-EM12	2", 2-1/2	1"-14	1.00	0.47	1/2	125
13	SCW-EM13	2", 2-1/2	1"-14	1.00	0.87	1/2	125

Shown body mounted with Shell Mill and Inserts not included.

Shell Mill with more standard features!

- Body - Prepped for Coolant Thru, FX or Coolant Screw Req'd
- Body Dynamically Balanced
- ID Chip Hole Standard
- Standard & Extended Lengths up to 15"
- Replaceable Keys

Optional

- FX High Volume Coolant System for Ported Cutter Bodies

Standard Features

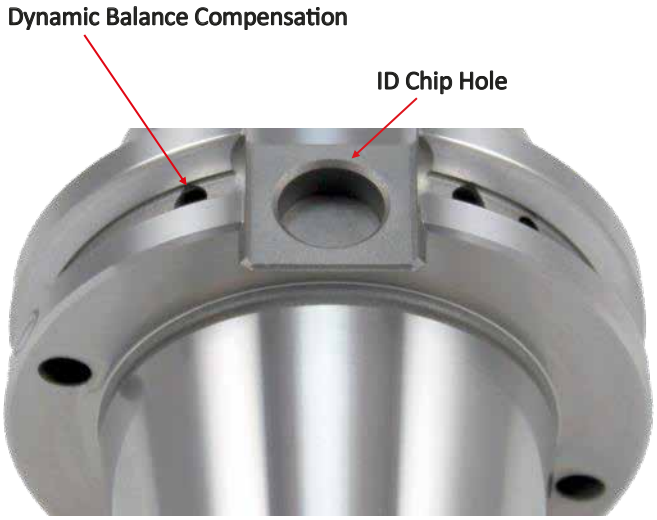

FX - High Volume Coolant System

Shown body mounted with Shell Mill and Inserts not included.

Did your cutter company supply a coolant screw?

Use our standard holder for coolant through the modified screw - or - use our FX model for additional coolant flow!

The standard model is designed for non-coolant and coolant screw applications. For ported cutters, coolant holes to the insert from the pilot of the holder, the FX model is required.

FX Coolant Port System

- Designed for cutter bodies with coolant ports to each insert from the mounting pilot.
- 400%+ Increase in coolant volume for faster chip evacuation in high feed milling applications.

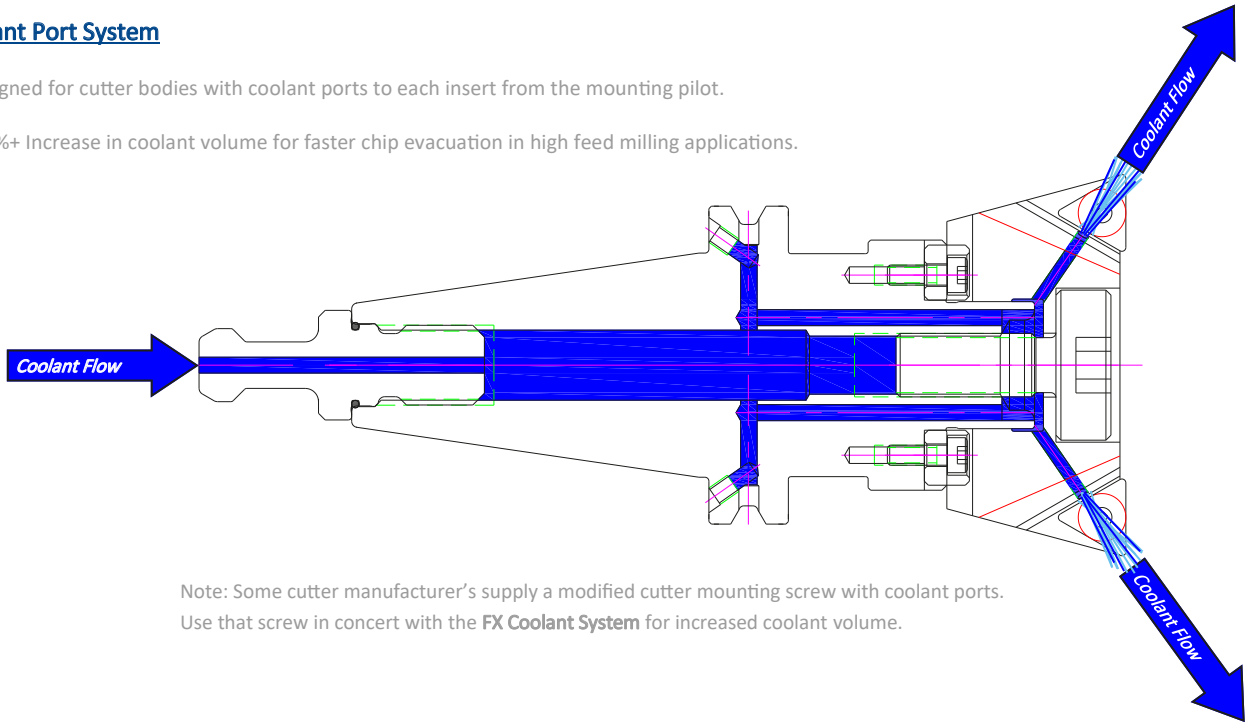

Note: Some cutter manufacturer's supply a modified cutter mounting screw with coolant ports. Use that screw in concert with the **FX Coolant System** for increased coolant volume.

BT30 & BT30 Shell Mill Adapters

Features

- 3 µm - 0.0001" Bore Runout
- H5 Bore Tolerance or better
- Tapers are ground better than AT3 for optimal T.I.R.
- Coolant Thru Body
- Pre-Balanced for use @ 20,000 RPM

Optional (Order Separately):

- FX Coolant (add "F" to the part number)

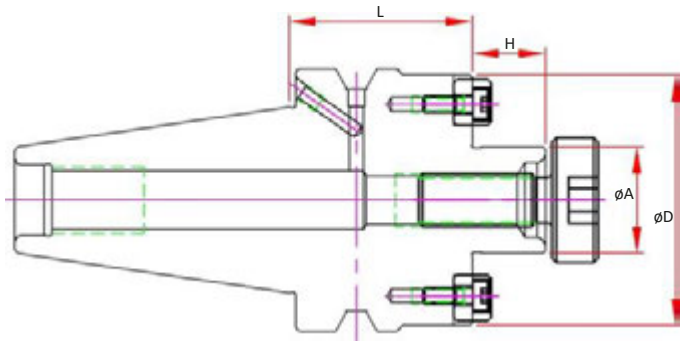

P-134

Dual Contact Spindle Part Number	Standard Spindle Part Number	A Pilot	D	H	L Projection	Drive Key Size	Drive Key Number	Mounting Screw Thread	Mounting Screw#
BT30-SM050-0119-B	BT30-SM050-0119				1.19				
BT30-SM050-0200-B		0.50	1.38	0.57	2.00	0.250	DK-SM050	1/4-28	SCW-SM050
BT30-SM050-0400-B					4.00				
BT30-SM075-0119-B	BT30-SM075-0119				1.19				
BT30-SM075-0200-B		0.75	1.75	0.69	2.00	0.312	DK-SM075	3/8-24	SCW-SM075
BT30-SM075-0400-B					4.00				
BT30-SM100-0119-B	BT30-SM100-0119	1.00	1.97	0.69	1.19	0.375	DK-SM100	1/2-20	SCW-SM100

BT40 & BT40 Shell Mill Adapters

Features

- 3 µm - 0.0001" Bore Runout
- H5 Bore Tolerance or better
- Tapers are ground better than AT3 for optimal T.I.R.
- Coolant Thru Body
- Pre-Balanced for use @ 20,000 RPM

Optional (Order Separately):

- FX Coolant (add "F" to the part number)
- DIN-B Coolant (Select models)

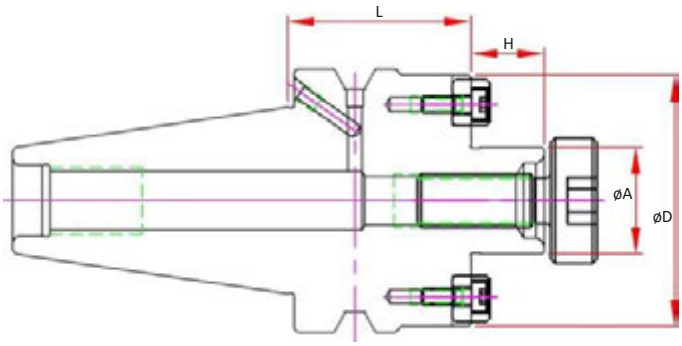


P-134

Dual Contact Spindle Part Number	Standard Spindle Part Number	A Pilot	D	H	L Projection	Drive Key Size	Drive Key Number	Mounting Screw Thread	Mounting Screw#
BT40-SM075-0175-B	BT40-SM075-0175	0.75	1.75	0.69	1.75	0.312	DK-SM075	3/8-24	SCW-SM075
BT40-SM075-0400-B	BT40-SM075-0400				4.00				
BT40-SM100-0175-B	BT40-SM100-0175	1.00	1.97	0.69	1.75	0.375	DK-SM100	1/2-20	SCW-SM100
BT40-SM100-0400-B	BT40-SM100-0400				4.00				
BT40-SM125-0200-B	BT40-SM125-0200	1.25	2.87	0.69	2.00	0.500	DK-SM125	5/8-18	SCW-SM125
	BT40-SM125-0400				4.00				
BT40-SM150-0200-B	BT40-SM150-0200	1.50	3.82	0.94	2.00	0.625	DK-SM150	3/4-16	SCW-SM150

CAT40 & CAT40 Shell Mill Adapters

Features

- 3 µm - 0.0001" Bore Runout
- H5 Bore Tolerance or better
- Tapers are ground better than AT3 for optimal T.I.R.
- Coolant Thru Body
- Pre-Balanced for use @ 20,000 RPM

Optional (Order Separately):

- FX Coolant (add "F" to the part number)
- DIN-B Coolant (Select models)

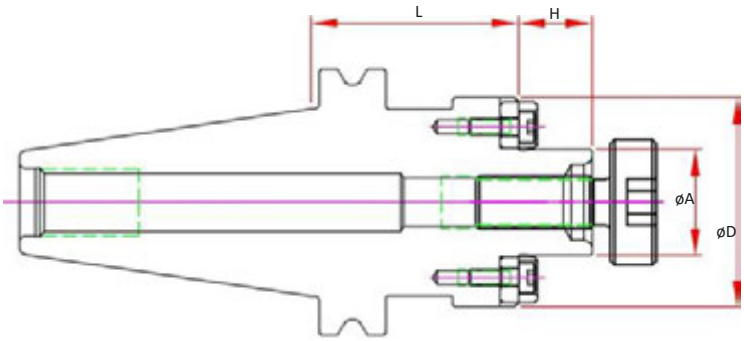


P-134

Dual Contact Spindle Part Number	Standard Spindle Part Number	A Pilot	D	H	L Projection	Drive Key Size	Drive Key Number	Mounting Screw Thread	Mounting Screw#
CAT40-SM050-0175-B	CAT40-SM050-0175	0.500	1.38	0.57	1.75	0.250	DK-SM050	1/4-28	SCW-SM050
CAT40-SM050-0400-B	CAT40-SM050-0400				4.00				
CAT40-SM050-0600-B	CAT40-SM050-0600				6.00				
	CAT40-SM050-0900				9.00				
CAT40-SM075-0175-B	CAT40-SM075-0175	0.750	1.75	0.69	1.75	0.312	DK-SM075	3/8-24	SCW-SM075
CAT40-SM075-0400-B	CAT40-SM075-0400				4.00				
CAT40-SM075-0600-B	CAT40-SM075-0600				6.00				
CAT40-SM075-0800-B	CAT40-SM075-0800				8.00				
CAT40-SM075-0900-B	CAT40-SM075-0900				9.00				
CAT40-SM100-0200-B	CAT40-SM100-0200	1.000	1.97	0.69	2.00	0.375	DK-SM100	1/2-20	SCW-SM100
CAT40-SM100-0400-B	CAT40-SM100-0400				4.00				
CAT40-SM100-0600-B	CAT40-SM100-0600				6.00				
CAT40-SM100-0800-B	CAT40-SM100-0800				8.00				
CAT40-SM125-0225-B	CAT40-SM125-0225	1.250	2.87	0.69	2.25	0.500	DK-SM125	5/8-18	SCW-SM125
CAT40-SM150-0240-B	CAT40-SM150-0240	1.500	3.82	0.94	2.40	0.625	DK-SM150	3/4-16	SCW-SM150
CAT40-SM200-0240-B	CAT40-SM200-0240	2.000	4.37	0.94	2.40	0.750	DK-SM200	1"-14	SCW-SM200

CAT50 & CAT50 Shell Mill Adapters

Features

- 3 µm - 0.0001" Bore Runout
- H5 Bore Tolerance or better
- Tapers are ground better than AT3 for optimal T.I.R.
- Coolant Thru Body
- Pre-Balanced for use @ 20,000 RPM

Optional (Order Separately):

- FX Coolant (add "F" to the part number)
- DIN-B Coolant (Select models)

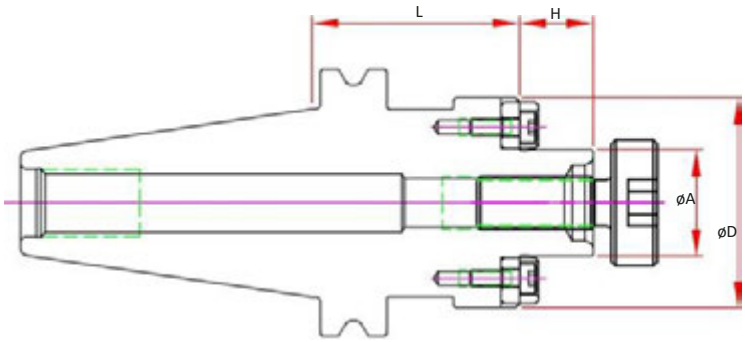


P-134

Dual Contact Spindle Part Number	Standard Spindle Part Number	A Pilot	D	H	L Projection	Drive Key Size	Drive Key Number	Mounting Screw Thread	Mounting Screw#
CAT50-SM075-0150-B	CAT50-SM075-0150				1.50				
CAT50-SM075-0350-B	CAT50-SM075-0350				3.50				
CAT50-SM075-0550-B	CAT50-SM075-0550				5.50				
CAT50-SM075-0800-B	CAT50-SM075-0800	0.75	1.75	0.69	8.00	0.312	DK-SM075	3/8-24	SCW-SM075
CAT50-SM075-1000-B-F**	CAT50-SM075-1000F**				10.00				
CAT50-SM075-1200-B-F**	CAT50-SM075-1200F**				12.00				
CAT50-SM075-1500-B-F**	CAT50-SM075-1500F**								
CAT50-SM100-0200-B	CAT50-SM100-0200				2.00				
CAT50-SM100-0400-B	CAT50-SM100-0400				4.00				
CAT50-SM100-0600-B	CAT50-SM100-0600				6.00				
CAT50-SM100-0800-B	CAT50-SM100-0800	1.00	1.97	0.69	8.00	0.375	DK-SM100	1/2-20	SCW-SM100
CAT50-SM100-1000-B-F**	CAT50-SM100-1000F**				10.00				
CAT50-SM100-1200-B-F**	CAT50-SM100-1200F**				12.00				
	CAT50-SM100-1500F**				15.00				
CAT50-SM125-0150-B	CAT50-SM125-0150				1.50				
CAT50-SM125-0350-B	CAT50-SM125-0350				3.50				
CAT50-SM125-0550-B	CAT50-SM125-0550				5.50				
CAT50-SM125-0800-B	CAT50-SM125-0800	1.25	2.75	0.69	8.00	0.500	DK-SM125	5/8-18	SCW-SM125
	CAT50-SM125-1000F**								
CAT50-SM125-1200-B-F**	CAT50-SM125-1200F**				12.00				
	CAT50-SM125-1500F**				15.00				
CAT50-SM150-0240-B	CAT50-SM150-0240				2.40		DK-SM150-C		
CAT50-SM150-0400-B	CAT50-SM150-0400	1.50	3.82	0.94	4.00	0.625	DK-SM150	3/4-16	SCW-SM150
CAT50-SM150-0600-B	CAT50-SM150-0600				6.00		DK-SM150		
CAT50-SM150-0800-B	CAT50-SM150-0800				8.00		DK-SM150		
CAT50-SM200-0240-B	CAT50-SM200-0240	2.00	4.37	0.94	2.40	0.750	DK-SM200	1"-14	SCW-SM200
CAT50-SM200-0400-B	CAT50-SM200-0400				4.00				

** Stocked in "FX" Coolant Style Only

HSK 63A Shell Mill Adapters

Features

- 3 µm - 0.0001" Bore Runout
- H5 Bore Tolerance or better
- Coolant Thru Body
- Pre-Balanced for use @ 20,000 RPM

Optional (Order Separately):

- FX Coolant (add "F" to the part number)

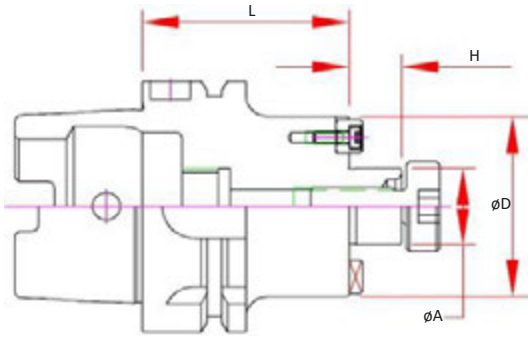


P-137

Part Number	A Pilot	D	H	L Projection	Drive Key Size	Drive Key Number	Mounting Screw Thread	Mounting Screw#
HSK063A-SM050-0177	0.500	1.38	0.57	1.77	0.250	DK-SM050	1/4-28	SCW-SM050
HSK063A-SM050-0394				3.94				
HSK063A-SM050-0630				6.30				
HSK063A-SM050-0800				8.00				
HSK063A-SM075-0177	0.75	1.71	0.69	1.77	0.312	DK-SM075	3/8-24	SCW-SM075
HSK063A-SM075-0394				3.94				
HSK063A-SM075-0630				6.30				
HSK063A-SM075-0800				8.00				
HSK063A-SM100-0197	1.00	1.97	0.69	1.97	0.375	DK-SM100	1/2-20	SCW-SM100
HSK063A-SM100-0394				3.94				
HSK063A-SM100-0630				6.30				
HSK063A-SM100-0800				8.00				
HSK063A-SM125-0236	1.25	2.75	0.69	2.36	0.500	DK-SM125	5/8-18	SCW-SM125
HSK063A-SM125-0394				3.94				
HSK063A-SM150-0236	1.50	3.78	0.94	2.36	0.625	DK-SM150	3/4-16	SCW-SM150

HSK 100A Shell Mill Adapters

Features

- 3 µm - 0.0001" Bore Runout
- H5 Bore Tolerance or better
- Coolant Thru Body
- Pre-Balanced for use @ 15,000 RPM

Optional (Order Separately):

- FX Coolant (add "F" to the part number)

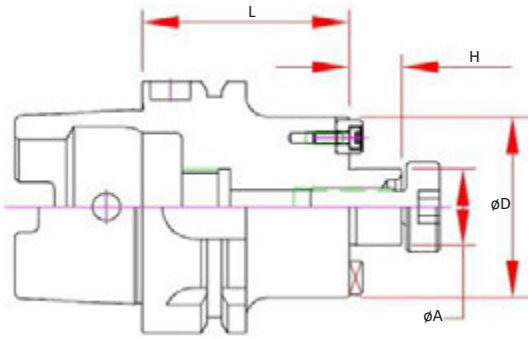


P-137

Part Number	A Pilot	D	H	L Projection	Drive Key Size	Drive Key Number	Mounting Screw Thread	Mounting Screw#
HSK100A-SM075-0225	0.75	1.71	0.69	2.25	0.312	DK-SM075	3/8-24	SCW-SM075
HSK100A-SM075-0350				3.50				
HSK100A-SM075-0550				5.50				
HSK100A-SM075-0800				8.00				
HSK100A-SM075-1000				10.00				
HSK100A-SM075-1200				12.00				
HSK100A-SM075-1500				15.00				
HSK100A-SM100-0225	1.00	1.97	0.69	2.25	0.375	DK-SM100	1/2-20	SCW-SM100
HSK100A-SM100-0400				4.00				
HSK100A-SM100-0600				6.00				
HSK100A-SM100-0800				8.00				
HSK100A-SM100-1000				10.00				
HSK100A-SM100-1200				12.00				
HSK100A-SM100-1500				15.00				
HSK100A-SM125-0250	1.25	2.75	0.69	2.50	0.500	DK-SM125	5/8-18	SCW-SM125
HSK100A-SM125-0350				3.50				
HSK100A-SM125-0550				5.50				
HSK100A-SM125-0800				8.00				
HSK100A-SM150-0250	1.50	3.78	0.94	2.50	0.625	DK-SM150	3/4-16	SCW-SM150
HSK100A-SM150-0400				4.00				
HSK100A-SM150-0600				6.00				
HSK100A-SM150-0800				8.00				
HSK100A-SM200-0250	2.00	4.37	0.94	2.50	0.750	DK-SM200	1"-14	SCW-SM200
HSK100A-SM200-0400				4.00				

Shell Mill Screws

Replacement screw for catalog holders

Note:

Coolant Screws not available.

- Coolant flow from a modified screw does not feed full volume to the inserts
- Modifying the screw weakens the screw causing damage to the cutter and machine tool

FX Holders are available for coolant cutter applications

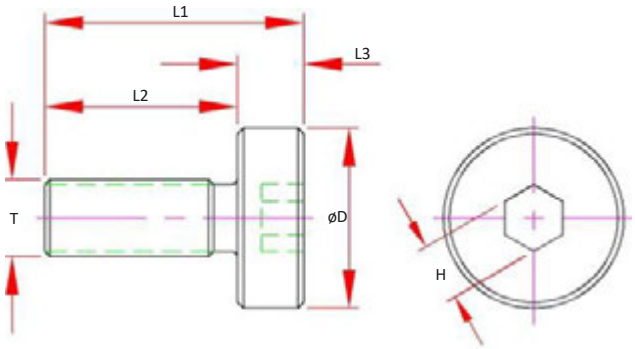

Shell Mill Pilot	Mount Screw Number	T Thread (UNF)	D	H Hex	L1	L2	L3	Maximum Tightening Torque
1/2	SCW-SM050	1/4-28	0.62	0.25	0.91	0.63	0.28	14 ft/lbs
1/2	SCW-SM050-SM	1/4-28	0.38	0.25	1.00	0.75	0.25	14 ft/lbs
3/4	SCW-SM075	3/8-24	0.87	0.31	1.26	0.79	0.31	45 ft/lbs
3/4	SCW-SM075-SM	3/8-24	0.56	0.31	1.38	1.00	0.38	45 ft/lbs
1	SCW-SM100	1/2-20	1.18	0.38	1.69	1.26	0.43	60 ft/lbs
1	SCW-SM100-SM	1/2-20	0.75	0.38	2.00	1.50	0.50	60 ft/lbs
1-1/4	SCW-SM125	5/8-18	1.50	0.50	2.05	1.57	0.47	70 ft/lbs
1-1/2	SCW-SM150	3/4-16	1.89	0.63	2.36	1.81	0.55	75 ft/lbs
2"	SCW-SM200	1"-14	2.48	0.83	2.52	1.97	0.55	80 ft/lbs

Shell Mill Drive Keys

Kit includes

- (2) Drive Keys
- (2) Mounting Screws

Shell Mill Pilot	Drive Key Number	Drive Key Size	Specifications
1/2	DK-SM050	0.250	
3/4	DK-SM075	0.312	
1"	DK-SM100	0.375	
1"	DK-SM100-B	0.375	Fits BT30-SM100-0119
1-1/4	DK-SM125	0.500	
1-1/2	DK-SM150	0.625	
1-1/2	DK-SM150-C	0.625	Fits CAT50-SM150-0240
2"	DK-SM200	0.750	

Pioneer Quick Change Tapping Options

Pioneer offers Rigid, Length Compensating and Tap ER for fully Synchronized tapping applications. Our adapters are manufactured by the company who invented the system so there is never a compatibility problem.

What holder should I use?

In CNC applications where the hole is being drilled in the same setup, it comes down to the machine tool to determine which holder is best for you.

Rigid Tapping

When rigid tapping in a fully synchronized system ER Tap collets provide zero movement with no axial play. While Quick Change RT & RA are called “rigid” they still have some movement in the Quick Change connection which can cause some issues.

RT holders do have a hole thru the center for coolant, it is not sealed but works well with the appropriate adapter. Most RA adapters allow coolant to the back of the tap , the exception is some of the pipe adapters have a stop plug that needs to be modified. This is not a sealed system but fluid dynamics apply, if the outlet coolant hole is larger than the inlet coolant hole there is no issue. Leakage occurs when the outlet coolant hole is smaller than the inlet causing back pressure. This back pressure will leak out of the mechanism.

Roll Form

It is recommended to use ER Tap Collets for Roll Form Tapping. Quick change does not perform well with Roll Form applications.

Length Compensating

In applications where there is backlash in the machine or timing to pitch issues, Tension and Compression holders will compensate to allow the tap to cut freely without pressure from the machine tool.
Programming should be 95-98% of Pitch of in-feed, 100% of Pitch on reverse. This will allow the tap to pull out on the springs of the holder while tapping the hole and spring back when exiting the hole to prevent thread pulling and double cutting.

Rigid Adapters vs Torque Control

Torque control adapters have a user adjustable clutch. The clutch is set for mild steel from the factory. Torque control adapters will clutch if the there is hard spots in the material, the drilled hole is not deep enough or the tap has become dull and is not cutting properly. Due to the sensitivity of the clutch the adapter will clutch before the tap is fully dull.

In CNC machine tools we recommend RA Rigid Adapters with TC Tension and Compression holders due to the drilled hole being controlled by the same setup. However there is always a chance of tap breakage if the tap becomes to dull in a RA Adapter.

RT - Straight Shank

Features:

- Flats for Lathe Applications
- Compatible with industry standards

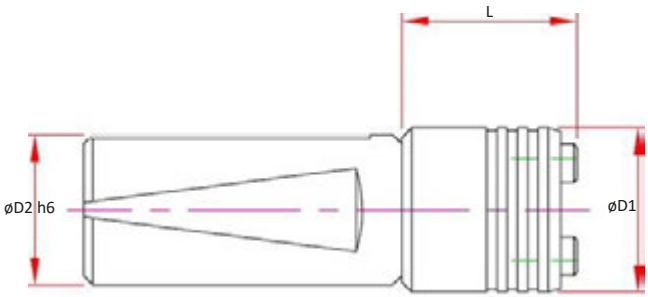

Size	Part Number	Capacity	D1	D2	L
1	S100-RT1-0158	#6 - 9/16	1.34	1.000	1.57
2	S100-RT2-0237	5/16 - 7/8	1.93	1.000	2.36
3	S125-RT3-0375	9/16 - 1-3/8	2.89	1.250	3.74

TC - Straight Shank

Features:

- Non Coolant
- Flats for Lathe Applications
- Compatible with industry standards
- TC Holders are not designed for Coolant Thru

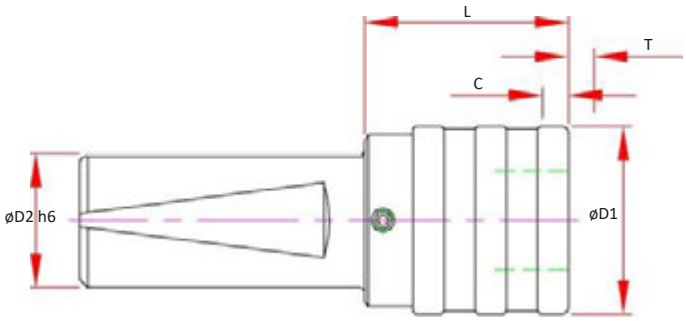

Size	Part Number	Capacity	D1	D2	L	T TENSION	C COMP.
1	S100-TC1-0158	#6 - 9/16	1.42	1.000	1.58	0.30	0.30
2	S100-TC2-0256	5/16 - 7/8	2.09	1.000	2.36	0.49	0.49
3	S125-TC3-0504	9/16 - 1-3/8	3.07	1.250	3.94	0.79	0.79

RT - Rigid QC Tap Holders

Features

- Body - Coolant Thru Center
- Tapers are ground better than AT3 for optimal T.I.R.
- **For use with RA Adapters Only!**

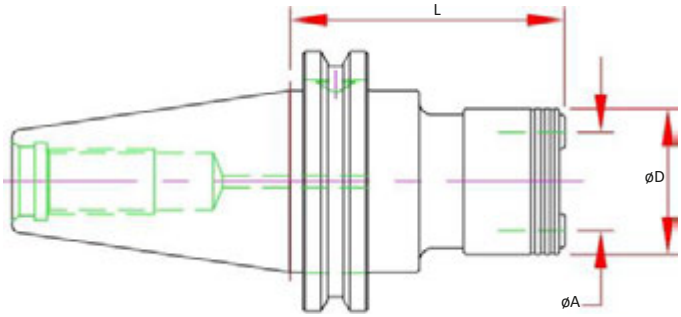

Size	Dual Contact Spindle Part Number	Standard Spindle Part Number	2 Piece Design	Capacity	A	D	L Projection
1		CAT40-RT1-72		#6-9/16	0.75	1.34	2.83
1	CAT40-RT1-0332-B	CAT40-RT1-0332	Y	#6-9/16	0.75	1.34	3.32
2		CAT40-RT2-91		5/16-7/8	1.22	1.93	3.58
2	CAT40-RT2-0411-B	CAT40-RT2-0411	Y	5/16-7/8	1.22	1.93	4.11
3		CAT40-RT3-130		9/16-1-3/8	1.89	2.89	5.12
3	CAT40-RT3-0574-B	CAT40-RT3-0574	Y	9/16-1-3/8	1.89	2.89	5.74
1		CAT50-RT1-72		#6-9/16	0.75	1.34	2.83
1	CAT50-RT1-0557-B	CAT50-RT1-0557	Y	#6-9/16	0.75	1.34	5.57
2		CAT50-RT2-91		5/16-7/8	1.22	1.93	3.58
2	CAT50-RT2-0636-B	CAT50-RT2-0636	Y	5/16-7/8	1.22	1.93	6.36
3		CAT50-RT3-130		9/16-1-3/8	1.89	2.89	5.12
3	CAT50-RT3-0774-B	CAT50-RT3-0774	Y	9/16-1-3/8	1.89	2.89	7.74
1	BT30-RT1-0432-B	BT30-RT1-0432	Y	#6-9/16	0.75	1.34	4.32
2	BT30-RT2-0511-B	BT30-RT2-0511	Y	5/16-7/8	1.22	1.93	5.11
1		BT40-RT1-72		#6-9/16	0.75	1.34	2.83
1	BT40-RT1-0357-B	BT40-RT1-0357	Y	#6-9/16	0.75	1.34	3.57
2		BT40-RT2-91		5/16-7/8	1.22	1.93	3.58
2	BT40-RT2-0436-B	BT40-RT2-0436	Y	5/16-7/8	1.22	1.93	4.36
1		HSK 63A-RT1-65		#6-9/16	0.75	1.34	2.56
2		HSK 63A-RT2-98		5/16-7/8	1.22	1.93	3.86

RT holders work best in rigid cut tap applications with synchronized speed and feed to match the tap's exact pitch. For roll form taps it is recommended to use TER collets and ER holders.

TC - Tension & Compression Holders

Features

- Tension and Compression Stroke for improved tap life
- Pressure Point Mechanism to increase the cutting pressure and ensure a positive start
- Size 3 includes pull to release system to prevent damage from over stroke
- TC Holders are not designed for Coolant Thru
- For use with both RA and TC adapters
    - TC for machines with limited "Z" control
- 2 Piece Design is assembled Straight Shank Tap Holder with End Mill Adapter
- Tapers are ground better than AT3 for optimal T.I.R.

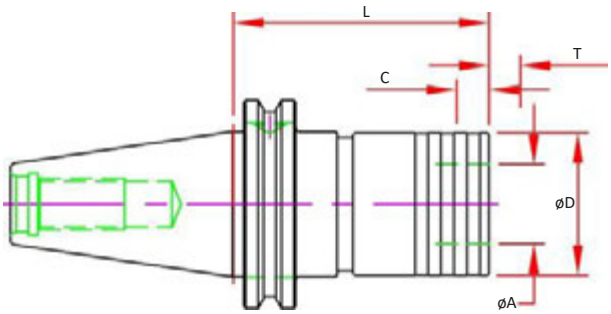


P-134

Size	Dual Contact Spindle Part Number	Standard Spindle Part Number	2 Piece Design	Capacity	A	D	L	T Tension	C Comp.
1		CAT40-TC1-59		#6-9/16	0.75	1.42	2.32	0.30	0.30
1	CAT40-TC1-0333-B	CAT40-TC1-0333	Y	#6-9/16	0.75	1.42	3.33	0.30	0.30
2		CAT40-TC2-97		5/16-7/8	1.22	2.09	3.82	0.49	0.49
2	CAT40-TC2-0411-B	CAT40-TC2-0411	Y	5/16-7/8	1.22	2.09	4.11	0.49	0.49
3		CAT40-TC3-149		9/16-1-3/8	1.89	3.07	5.87	0.79	0.79
3	CAT40-TC3-0594-B	CAT40-TC3-0594	Y	9/16-1-3/8	1.89	3.07	5.94	0.79	0.79
1		CAT50-TC1-59		#6-9/16	0.75	1.42	2.32	0.30	0.30
1	CAT50-TC1-0558-B	CAT50-TC1-0558	Y	#6-9/16	0.75	1.42	5.58	0.30	0.30
2		CAT50-TC2-97		5/16-7/8	1.22	2.09	3.82	0.49	0.49
2	CAT50-TC2-0636-B	CAT50-TC2-0636	Y	5/16-7/8	1.22	2.09	6.36	0.49	0.49
3		CAT50-TC3-141		9/16-1-3/8	1.89	3.07	5.55	0.79	0.79
3	CAT50-TC3-0794-B	CAT50-TC3-0794	Y	9/16-1-3/8	1.89	3.07	7.94	0.79	0.79
1	BT30-TC1-0433-B	BT30-TC1-0433	Y	#6-9/16	0.75	1.42	4.33	0.30	0.30
2	BT30-TC2-0511-B	BT30-TC2-0511	Y	5/16-7/8	1.22	2.09	5.11	0.49	0.49
1		BT40-TC1-67		#6-9/16	0.75	1.42	2.64	0.30	0.30
1	BT40-TC1-0358-B	BT40-TC1-0358	Y	#6-9/16	0.75	1.42	3.58	0.30	0.30
2		BT40-TC2-94		5/16-7/8	1.22	2.09	3.70	0.49	0.49
2	BT40-TC2-0436-B	BT40-TC2-0436	Y	5/16-7/8	1.22	2.09	4.36	0.49	0.49
1		HSK 63A-TC1-102		#6-9/16	0.75	1.42	4.02	0.30	0.30
2		HSK 63A-TC2-137		5/16-7/8	1.22	2.09	5.39	0.49	0.49

RA - Rigid QC Tap Adapters

Features:

- Direct Drive for Rigid Tapping
- Bilz Quick Change Compatible
- Push to load / release system for quick tool change

Recommended for use in both RT & TC Tap Holders

Note:
Due to Multiple Standards for Metric Taps, the actual shank and square must be supplied to verify compatibility.

ANSI Tap Size	ANSI Metric	Shank	Shank MM	Square	Square MM	SIZE 1	SIZE 2	SIZE 3
#0 - #6	M1.6	0.141	3.58	0.110	2.79	RA1U-0141		
#8	M4	0.168	4.27	0.131	3.33	RA1U-0168		
#10	M4.5, M5	0.194	4.93	0.152	3.86	RA1U-0194		
#12		0.220	5.59	0.165	4.19	RA1U-0220		
	M6, M8	0.236	6.00	0.193	4.90	RA1D-M060X049		
1/4	M6, M6.3	0.255	6.48	0.191	4.85	RA1U-0255		
	M7, M9, M10	0.276	7.00	0.217	5.50	RA1D-M070X055		
1/8 PIPE SS		0.313	7.95	0.234	5.94	RA1U-0313		
	M11	0.315	8.00	0.236	6.00	RA1J-M080X060		
	M8, M11	0.315	8.00	0.244	6.20	RA1D-M080X062		
5/16	M7, M8	0.318	8.08	0.238	6.05	RA1U-0318	RA2U-0318	
3/8	M10	0.381	9.68	0.286	7.26	RA1U-0381	RA2U-0381	
7/16		0.323	8.20	0.242	6.15	RA1U-0323	RA2U-0323	
	M9, M12	0.354	9.00	0.276	7.00	RA1D-M090X070		
1/2	M12, M12.5	0.367	9.32	0.275	6.99	RA1U-0367	RA2U-0367	
9/16	M14	0.429	10.90	0.322	8.18	RA1U-0429	RA2U-0429	RA3U-0429
1/8 PIPE LS		0.438	11.13	0.328	8.33	RA1U-0438	RA2U-0438	
	M16	0.472	12.00	0.354	9.00		RA2D-M120X090	
5/8	M16	0.480	12.19	0.360	9.14		RA2U-0480	RA3U-0480
11/16	M18	0.542	13.77	0.406	10.31		RA2U-0542	RA3U-0542
1/4 PIPE		0.563	14.30	0.421	10.69		RA2U-0563	
3/4		0.590	14.99	0.442	11.23		RA2U-0590	RA3U-0590
13/16	M20	0.652	16.56	0.489	12.42		RA2U-0652	RA3U-0652
1/2 PIPE		0.688	17.48	0.515	13.08		RA2U-0688	RA3U-0688
7/8	M22	0.697	17.70	0.523	13.28		RA2U-0697	RA3U-0697
3/8 PIPE		0.700	17.78	0.531	13.49		RA2U-0700	RA3U-0700
15/16	M24	0.760	19.30	0.570	14.48			RA3U-0760
1"	M25	0.800	20.32	0.600	15.24			RA3U-0800
1-1/16 - 1-1/8	M27	0.896	22.76	0.672	17.07			RA3U-0896
3/4 PIPE		0.906	23.01	0.679	17.25			RA3U-0906
1-3/16 - 1-1/4	M30	1.021	25.93	0.766	19.46			RA3U-1021
1-5/16 - 1-3/8	M33	1.108	28.14	0.831	21.11			RA3U-1108
1" PIPE		1.125	28.58	0.843	21.41			RA3U-1125

TC holders are length compensating holders, this allows the tap to start late without causing damage to the tap, holder or machine tool. TC holders are recommended for use with RA adapters unless it is a bottom tapping operation and Z length is not controlled, TC adapters provide a clutch so if the adapter hits bottom the unit will clutch allowing the spindle to continue without damage. Note: There is trial and testing to achieve the proper torque setting on a TC adapter. Adapters come set from the factory for mild steel. Adapter must be set for material hardness and quality of the tap, dull taps require additional pressure to start.

When running TC holders in a machining center it is recommended to set the feed rate 95-98% of the pitch of the tap on in stroke and 100% of pitch on out stroke. This allows the tap to pull out on the holder springs while cutting preventing spindle pressure pushing on the tap. On reverse the tap will “spring” back to help prevent pulled or damage to the first thread.

For roll form taps it is recommended to use TER collets and ER holders.

ANSI Tap Shank and Square Information

Information from ANSI/ASME B94.9-1987

Note:
Due to Multiple Standards for Metric Taps, the actual shank and square must be supplied to verify compatibility.

ER Tap Collets	QC Tap Adapters	Shank		Square		ANSI	
TER Collet	RA Rigid	MM	Inch	MM	Inch	ANSI Inch	ANSI Metric
TER (16, 20, 25, 32, 40)U -141	RA1U-0141	3.58	0.141	2.79	0.11	#0 - #6	M1.6 - M3.5
TER (16, 20, 25, 32, 40)U -168	RA1U-0168	4.27	0.168	3.33	0.131	#8	M4
TER (16, 20, 25, 32, 40)U -194	RA1U-0194	4.93	0.194	3.86	0.152	#10	M4.5 - M5
TER (16, 20, 25, 32, 40)U -220	RA1U-0220	5.59	0.22	4.19	0.165	#12	
TER (16, 20, 25, 32, 40)U -255	RA1U-0255	6.48	0.255	4.85	0.191	#14 & 1/4"	M6 - M6.3
	RA1U-0313	7.95	0.313	5.94	0.234	1/16"P & 1/8"P-SS	
TER (16, 20, 25, 32, 40)U -318	RA (1, 2) U-0318	8.08	0.318	6.05	0.238	5/16"	M7 - M8
TER (16, 20, 25, 32, 40)U -323	RA (1, 2) U-0323	8.2	0.323	6.15	0.242	7/16"	
TER (16, 20, 25, 32, 40)U -367	RA (1, 2) U-0367	9.32	0.367	6.99	0.275	1/2"	M12 - M12.5
TER (16, 20, 25, 32, 40)U -381	RA (1, 2) U-0381	9.68	0.381	7.26	0.286	3/8"	M10
TER (25, 32, 40)U -429	RA (1, 2, 3) U-0429	10.9	0.429	8.18	0.322	9/16"	M14
TER (25, 32, 40)U -437	RA (1, 2) U-0438	11.13	0.438	8.33	0.328	1/8" P-LS	
TER (25, 32, 40)U -480	RA (2, 3) U-0480	12.19	0.48	9.14	0.36	5/8"	M16
TER (32, 40)U -542	RA (2, 3) U-0542	13.77	0.542	10.31	0.406	11/16"	M18
TER (32, 40)U -562	RA2U-0563	14.3	0.563	10.69	0.421	1/4" P	
TER (32, 40)U -590	RA (2, 3) U-0590	14.99	0.59	11.23	0.442	3/4"	
TER (32, 40)U -652	RA (2, 3) U-0652	16.56	0.652	12.42	0.489	13/16"	M20
TER40U -687	RA (2, 3) U-0688	17.48	0.688	13.08	0.515	1/2" P	
TER40U -697	RA (2, 3) U-0697	17.7	0.697	13.28	0.523	7/8"	M22
TER40U -700	RA (2, 3) U-0700	17.78	0.7	13.49	0.531	3/8" P	
TER40U -760	RA3U-0760	19.3	0.76	14.48	0.57	15/16"	M24
TER40U -800	RA3U-0800	20.32	0.8	15.24	0.6	1"	M25
	RA3U-0896	22.76	0.896	17.07	0.672	1-1/16" & 1-1/8"	M27
	RA3U-0906	23.01	0.906	17.25	0.679	3/4" P	
	RA3U-1021	25.93	1.021	19.46	0.766	1-3/16" & 1-1/4"	M30
	RA3U-1108	28.14	1.108	21.11	0.831	1-5/16" & 1-3/8"	M33
	RA3U-1125	28.58	1.125	21.41	0.843	1" P	

DIN Tap Shank and Square Information

Information from DIN 352, 371, 374, 376

Note:
Due to Multiple Standards for Metric Taps, the actual shank and square must be supplied to verify compatibility.

ER Tap Collets	QC Tap Adapters	Shank		Square		DIN			
TER Collet	RA Rigid	MM	Inch	MM	Inch	DIN 352	DIN 371	DIN 374	DIN 376
TER (16, 25)D -035		3.50	0.138	2.70	0.106	M3	M3	M4.5 - 5	M4.5 - 5
TER (16, 20, 25)D -040		4.00	0.157	3.00	0.118	M3.5	M3.5		
TER (16, 20, 25, 32)D -045		4.50	0.177	3.40	0.134	M4	M4	M6	M6
TER (16, 20, 25, 32)D -055		5.50	0.217	4.30	0.169			M7	M7
TER (16, 20, 25, 32, 40)D -060	RA1D-M060X049	6.00	0.236	4.90	0.193	M4.5 - M6	M5 & M6	M8	M8
TER (16, 20, 25, 32, 40)D -070	RA1D-M070X055	7.00	0.276	5.50	0.217	M7		M9 - M10	M9 - M10
TER (16, 20, 25, 32, 40)D -080	RA1D-M080X062	8.00	0.315	6.20	0.244		M8	M11	M11
TER (16, 20, 25, 32, 40)D -090	RA1D-M090X070	9.00	0.354	7.00	0.276	M12	M9	M12	M12
TER (16, 20, 25, 32, 40)D -100	RA1D-M100X080	10.00	0.394	8.00	0.315		M10		
TER (25, 32, 40)D -110		11.00	0.433	9.00	0.354	M14		M14	M14
TER (25, 32, 40)D -120	RA2D-M120X090	12.00	0.472	9.00	0.354	M16		M16	M16
TER (25, 32, 40)D -140		14.00	0.551	11.00	0.433	M18		M18	M18
TER (25, 32, 40)D -160		16.00	0.630	12.00	0.472	M20		M20	M20
TER (32, 40)D -180		18.00	0.709	14.50	0.571	M22 & M24		M22 & M24	M22 & M24
TER (32, 40)D -200		20.00	0.787	16.00	0.630	M27		M27	M27
TER 40D -220		22.00	0.866	18.00	0.709	M30		M30	M30

TG - Collet Chuck

Features

- **3 µm - 0.0001" Runout Taper to Taper**
- Coolant Thru Body
- Dynamically Pre-Balanced @ 20,000 RPM (CAT50 @ 15,000 RPM)
- Tapers are ground better than AT3 for optimal T.I.R.

Optional (Order Separately):

- Wrench
- Torque Wrench
- Collets
- DIN-B Coolant (Select models)

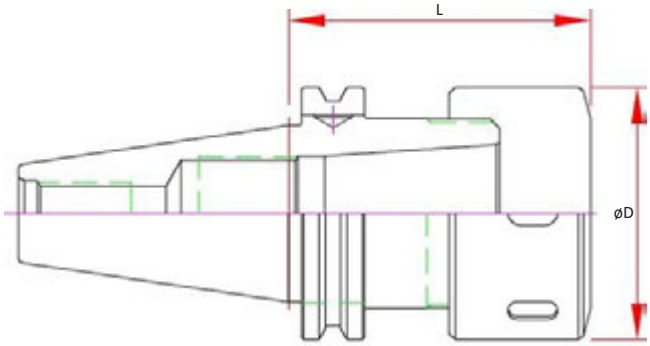

	Part Number	Range	D	L Projection	Collet	Screw	Nut	Wrench
BT40	BT40-TG100-0300	.094 - 1.00	2.48	3.00	TG100	ASC-ER40	TGN100	58-65 HOOK
CAT40	CAT40-TG100-0300	.094 - 1.00	2.48	3.00	TG100	ASC-ER40	TGN100	58-65 HOOK
	CAT40-TG100-0550			5.50				
CAT50	CAT50-TG100-0350	.094 - 1.00	2.48	3.50	TG100	ASC-ER40	TGN100	58-65 HOOK
	CAT50-TG100-0550			5.50				
	CAT50-TG100-0750			7.50				

Collet Nuts

Nut Part Number	Description	Nut Diameter	Wrench Part Number	Coolant Cap	Thread	Max. Torque
TGN-100	TG100 Spanner Nut	2.48 / 63mm	58-65 HOOK	-	1 7/8-12 Acme	75 ft/lbs Max

TG100 Inch Collets

Features:

- Standard .0004" T.I.R.
- Collapse Range: .020

We use only the best material and a Swiss grinding technique that ensures accuracy on each grind.

Nominal Tool	Tool Max	Tool Min	TG100	Nominal Tool	Tool Max	Tool Min	TG100	Nominal Tool	Tool Max	Tool Min	TG100
3/32	0.0938	0.0781	TG100-0094	13/32	0.4063	0.3906	TG100-0406	23/32	0.7188	0.7031	TG100-0719
7/64	0.1094	0.0938	TG100-0109	27/64	0.4219	0.4063	TG100-0422	47/64	0.7344	0.7188	TG100-0734
1/8	0.1250	0.1094	TG100-0125	7/16	0.4375	0.4219	TG100-0438	3/4	0.7500	0.7344	TG100-0750
9/64	0.1406	0.1250	TG100-0141	29/64	0.4531	0.4375	TG100-0453	49/64	0.7656	0.7500	TG100-0766
5/32	0.1563	0.1406	TG100-0156	15/32	0.4688	0.4531	TG100-0469	25/32	0.7813	0.7656	TG100-0781
11/64	0.1719	0.1563	TG100-0172	31/64	0.4844	0.4688	TG100-0484	51/64	0.7969	0.7813	TG100-0797
3/16	0.1875	0.1719	TG100-0188	1/2	0.5000	0.4844	TG100-0500	13/16	0.8125	0.7969	TG100-0813
13/64	0.2031	0.1875	TG100-0203	33/64	0.5156	0.5000	TG100-0516	53/64	0.8281	0.8125	TG100-0828
7/32	0.2188	0.2031	TG100-0219	17/32	0.5313	0.5156	TG100-0531	27/32	0.8438	0.8281	TG100-0844
15/64	0.2344	0.2188	TG100-0234	35/64	0.5469	0.5313	TG100-0547	55/64	0.8594	0.8438	TG100-0859
1/4	0.2500	0.2344	TG100-0250	9/16	0.5625	0.5469	TG100-0563	7/8	0.8750	0.8594	TG100-0875
17/64	0.2656	0.2500	TG100-0266	37/64	0.5781	0.5625	TG100-0578	57/64	0.8906	0.8750	TG100-0891
9/32	0.2813	0.2656	TG100-0281	19/32	0.5938	0.5781	TG100-0594	29/32	0.9063	0.8906	TG100-0906
19/64	0.2969	0.2813	TG100-0297	39/64	0.6094	0.5938	TG100-0609	59/64	0.9219	0.9063	TG100-0922
5/16	0.3125	0.2969	TG100-0313	5/8	0.6250	0.6094	TG100-0625	15/16	0.9375	0.9219	TG100-0938
21/64	0.3281	0.3125	TG100-0328	41/64	0.6406	0.6250	TG100-0641	61/64	0.9531	0.9375	TG100-0953
11/32	0.3438	0.3281	TG100-0344	21/32	0.6563	0.6406	TG100-0656	31/32	0.9688	0.9531	TG100-0969
23/64	0.3594	0.3438	TG100-0359	43/64	0.6719	0.6563	TG100-0672	63/64	0.9844	0.9688	TG100-0984
3/8	0.3750	0.3594	TG100-0375	11/16	0.6875	0.6719	TG100-0688	1	1.0000	0.9844	TG100-1000
25/64	0.3906	0.3750	TG100-0391	45/64	0.7031	0.6875	TG100-0703				

Collet Sets

Part Number	Collet Size	Pieces	Range	Increments
TG100-SET15	TG100	15	1/8-1"	1/16
TG100-SET21	TG100	21	3/8-1"	1/32
TG100-SET30	TG100	30	3/32-1"	1/32
TG100-SET41	TG100	41	3/8-1"	1/64
TG100-SET59	TG100	59	3/32-1"	1/64

DC - Drill Chuck

Features:

- Non Coolant
- Keyless w/ slots for spanner wrench (sold separately)

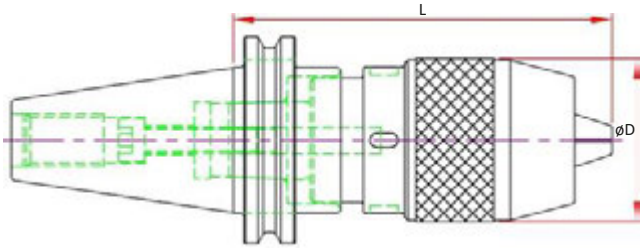


P-134

Part Number	Range	D	L Projection	Wrench
CAT40-DC050-0413	0.04 - 0.50	1.96	4.13	DCW13
CAT50-DC050-0394			3.94	DCW13
BT30-DC13-105			4.13	DCW13-BT30
BT40-DC13-110			4.33	DCW13
HSK 63A-DC13-155			6.10	DCW13

TB - Test Bar

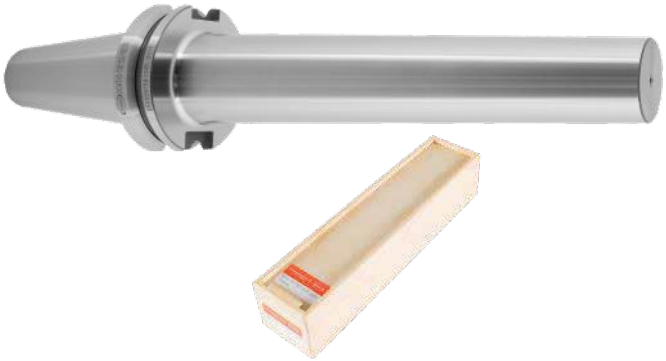

Features

- Concentric to Taper within 3µm (0.0001”) TIR
- Tapers are ground better than AT3 for optimal T.I.R.
- Hardened & Normalized for consistency
- 100% Individually inspected with Certification Sheet included
- Wood Box Included
- Laser Marked with Actual Diameter and Length

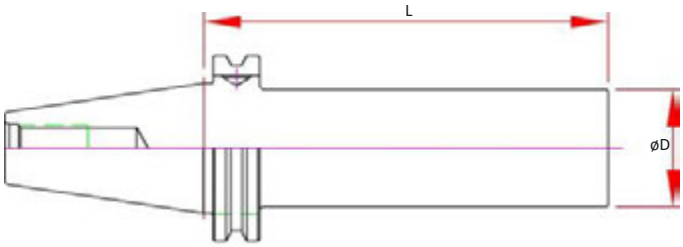

P-134

Part Number	Spindle	D	L Projection
BT30-TB32-200-B	STD & Dual Contact BT30	32mm	200mm
BT40-TB40-300-B	STD & Dual Contact BT40	40mm	300mm
CAT40-TB150-1000	STD CAT40	1.50	10.00
CAT40-TB150-1000-B	STD & Dual Contact CAT40	1.50	10.00
CAT50-TB200-1200	STD CAT50	2.00	12.00
CAT50-TB200-1200-B	STD & Dual Contact CAT50	2.00	12.00
HSK63A-TB150-1000	HSK63A & C	1.50	10.00
HSK100A-TB50-320	HSK100A & C	50mm	320mm

BT - Retention Knobs

Features

- Manufactured to the Industry Standards or machine builders specifications.
- Grind Finish to adhere to machine builder recommendations
- Coolant Knobs include O-ring on the thread side pilot diameter to adhere to builder recommendations

Note: **It is critical that the correct retention knob is used with each machining center. Please verify all dimensions prior to ordering. Machine specifications will be located in your machine manual or contact the machine manufacturer.**

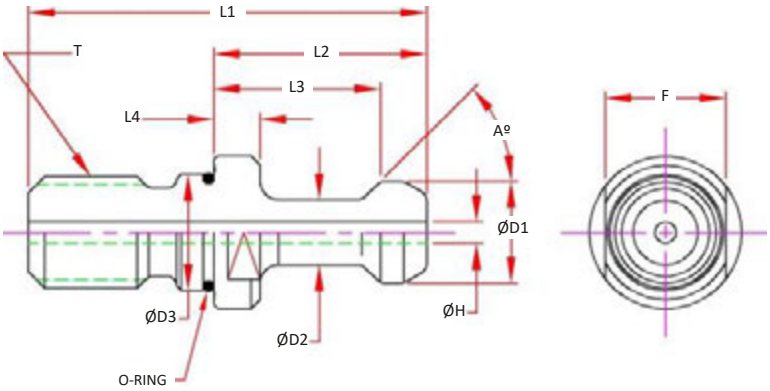

	Part Number	A Angle	D1 Head	D2 Neck	D3 Pilot	L1 OAL	L2 Proj.	L3 Pull Loc.	L4 Flange	H Hole	O-Ring	F Flats	T Thread	Socket Wrench	Notes
BT30	HPS- 16	45	0.433	0.276	0.492	1.693	0.906	0.709	0.197	-	-	13mm	M12	TWS-M13	MAS P30T-1
	HPS- 16C-FA			0.315						0.157	Yes †				MAS P30T-1 FANUC
	HPS– 16C			0.276						0.098	-				MAS P30T-1
	HPS- 17	60		0.276						-	-				MAS P30T-2
	HPS– 17C-BR			0.295						0.098	Yes †				MAS P30T-2 Brother
	HPS– 17C			0.276						0.098	-				MAS P30T-2
BT40	HPS- 1	45	0.591	0.394	0.669	2.362	1.378	1.102	0.236	-	-	19mm	M16	TWS-M19	MAS P40T-1
	HPS– 1C								0.236	0.157*	Yes †				MAS P40T-1
	HPS-806 -1	75	0.748	0.551		2.126	1.142	0.906	0.276	0.236	Yes †				JIS B6339
	HPS-G51	45	0.740	0.490		1.736	0.752	0.552	0.118	0.276	Yes †				Coolant
	HPS-O8	90	0.591	0.394		2.362	1.378	1.102	0.236	-	-				MAS P40T-3

† O-Ring added to Pilot, adheres to machine company changes, remove O-Ring if not required

Examples of Coolant Thru Retention Knobs

The 7 different styles of coolant knobs shown below the manufacturers listed at JMTBA MAS403 Modified.
Please verify which coolant thru knob you require prior to ordering or spindle damage may occur.

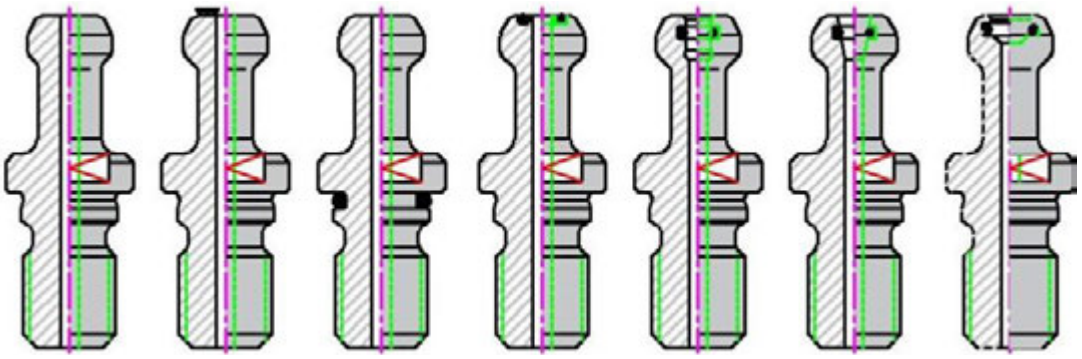

CAT - Retention Knobs

Features

- Manufactured to the Industry Standards or machine builders specifications.
- Grind Finish to adhere to machine builder recommendations
- Coolant Knobs include O-ring on the thread side pilot diameter to adhere to builder recommendations

Note: It is critical that the correct retention knob is used with each machining center. Please verify all dimensions prior to ordering. Machine specifications will be located in your machine manual or contact the machine manufacturer.

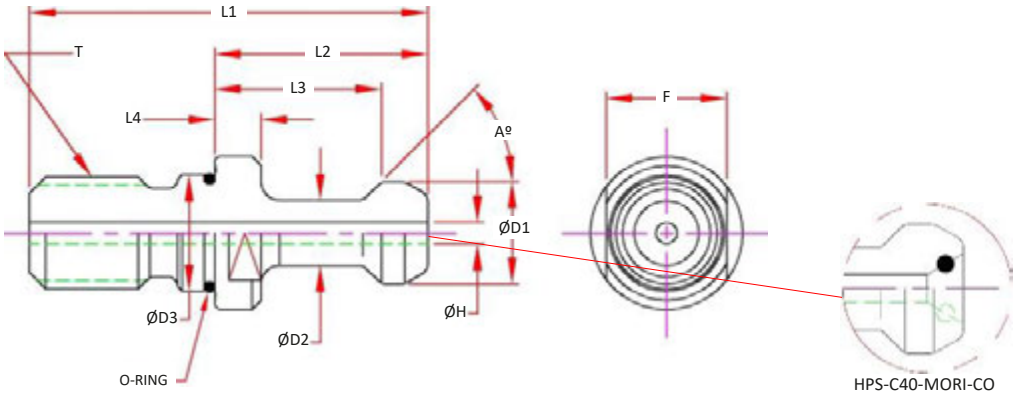

	Part Number	A Angle	D1 Head	D2 Neck	D3 Pilot	L1 OAL	L2 Proj.	L3 Pull Loc.	L4 Flange	H Hole	Pilot O-Ring	F Flats	T Thread	Socket Wrench	Notes
CAT40	HPS- 72	45	0.591	0.394	0.641	2.250	1.266	0.990	0.236	-	-	19mm	5/8-11	TWS-M19	MAS P40T-1
	HPS- 72C	45	0.591	0.394	0.641	2.250	1.266	0.990	0.118	0.157	Yes †				MAS P40T-1 w/ 3mm Flange
	HPS- 26	60	0.591	0.394	0.630	2.252	1.268	0.992	0.236	-	-				MAS P40T-2
	HPS- 26C	60	0.591	0.394	0.641	2.252	1.268	0.992	0.236	0.157	Yes †				MAS P40T-2
	HPS-806U-1	75	0.748	0.551	0.641	2.000	1.024	0.787	0.276	0.236	Yes †				JIS B6339
	HPS-806U-2	75	0.748	0.551	0.641	2.000	1.024	0.787	0.157	0.236	Yes †				JIS B6339 Matsuura w/4mm Flange
	HPS-C40-DIN-C	75	0.748	0.551	0.641	2.010	1.024	0.787	0.157	0.276	Yes †				DIN 69872
	HPS-C40-MORI-CO	75	0.748	0.551	0.641	2.015	1.029	0.793	0.236	0.276	Yes †				Mori O-Ring OD & ID
	HPS-D72	45	0.740	0.490	0.641	1.624	0.640	0.440	0.118	0.291	Yes †	0.750		TWS-075	ANSI B5.50
	HPS-B64-1	45	0.740	0.490	0.641	1.624	0.640	0.440	0.118	0.157	Yes †				Okuma Coolant Thru
	HPS-G60	45	0.740	0.490	0.641	1.624	0.640	0.440	0.118	-	-				Okuma Non Coolant
	HPS-O14	90	0.591	0.394	-	2.244	1.260	0.984	0.236	-	-	17mm		TWS-M17	MAS P40T-3 Mori-Seiki
	HPS-O14C	90	0.591	0.394	0.641	2.244	1.260	0.984	0.236	0.157	Yes †				MAS P40T-3 Coolant
CAT50	HPS- 54	45	0.906	0.669	1.031	3.354	1.780	1.386	0.402	0.236	Yes †	30mm	1”-8	TWS-M30	MAS P50T-1
	HPS- 63	60	0.906	0.669	1.024	3.248	1.772	1.378	0.394	-	-				MAS P50T-2
	HPS-B61	60	0.906	0.669	1.024	3.248	1.772	1.378	0.394	0.236	Yes †				MAS P50T-2 Coolant
	HPS-D92	45	1.140	0.820	1.031	2.580	1.000	0.700	0.210	0.457	Yes †	1.250		TWS-125	ANSI B5.50
	HPS-G43	45	1.140	0.820	1.031	2.303	1.000	0.700	0.197	0.394	Yes †	1.187		TWS-118	Mazak 16mm C’Bore in Face
	HPS-C50-MAZAK-C	45	1.140	0.820	1.031	2.303	1.000	0.700	0.197	0.394	Yes †	1.187		TWS-118	Mazak
	HPS-O19	90	0.906	0.669	-	3.346	1.780	1.386	0.394	-	-	30mm		TWS-M30	MAS P50T-3 Mori-Seiki
	HPS-O19C	90	0.906	0.669	1.031	3.346	1.780	1.386	0.394	0.250	Yes †				MAS P50T-3 Coolant
	HPS-711-45	75	1.102	0.827	1.031	2.913	1.338	0.984	0.197	0.468	Yes †				JIS B6339

† O-Ring added to Pilot, adheres to machine company changes, remove O-Ring if not required

TWS - Retention Knobs Sockets

Features

- Fits HPS Retention Knobs on the previous page
- May not fit other manufacturers designs & styles
- Uses standard torque wrench fractional drive
- Use Machine Tool Manufacturer's recommended tightening torque

Part Number	Retention Knob Flats	Torque Wrench Drive	Socket Length	Socket Diameter
TWS-075	0.750	1/2	1.15	1.30
TWS-125	1.250	1/2	1.56	1.93
TWS-118	1.187	1/2	1.56	1.93
TWS-M13	13mm	3/8	1.40	0.98
TWS-M17	17mm	1/2	1.74	1.30
TWS-M19	19mm	1/2	1.74	1.30
TWS-M30	30mm	1/2	2.24	1.97

Retention Knob Tightening Torque

To avoid any warranty and safety issues always use the machine tool manufacturer's specifications.

Traditional locking torque for Retention Knobs are as follows:

- 30 Taper = 36-40 ft/lbs
- 40 Taper = 76-85 ft/lbs
- 50 Taper = 100-110 ft/lbs

Depending on the material, heat treat and wall thickness of the tool holder the above torque specifications can expand the tool holder taper at the small end causing uneven spindle wear and cutting tool runout. Many companies have started using a lighter torque number to reduce or eliminate the expansion. Many machine tool manufacturers do not recommend this lighter system.
Check with your machine tool manufacturer for recommending operational torque.

Torque Wrench

Recommended settings to be 10% below maximum torque to prevent over tightening.

Note: It is recommended to calibrate the wrench to manufacturer's specifications and re-calibrate as recommended. Over torque will cause damage to the tool holder (and collet if applicable).

Part Number	Type	Drive Sq.	Torque Range
TWSQ025	Click & Reversible	1/4 (0.25)	20-200 in/lbs (+/- 4%)
TWSQ037	Click & Reversible	3/8 (0.37)	5-80 ft/lbs (+/-4%)
TWSQ050	Click & Reversible	1/2 (0.50)	30-150 ft/lbs (+/-4%)

HSK Coolant Tubes

- Fits HSK Form A Shanks
- Double Seal Design per DIN standard
  Replacement O-Rings listed, CS= Cross Section

Part Number	Description	Inner O-Ring	Outer O-Ring	Wrench
TUBE-063A	HSK 63A Coolant Tube	10mm ID x 2mm CS	10.8mm ID x 2.4mm CS	WRENCH HSK63A COOLNT TUBE
TUBE-100A	HSK 100A Coolant Tube	15mm ID x 3mm CS	15mm ID x 3mm CS	WRENCH HSK100 COOLNT TUBE

Wrenches

Hook Spanner

For Torque Values see page 140

Nut Size	Metric	Type	Works On	Part Number	Drive	Torque Wrench Head #
1.26	32	Hook Spanner	ERN16, ERN16B	WRENCH 30-32 HOOK	0.500	TWSQ050-S32
1.38	35.1	Hook Spanner	BC037, BC050, ERN20B	WRENCH 34-38 HOOK	0.500	TWSQ050-S38
1.50	38.1	Hook Spanner	BC062	WRENCH 40-42 HOOK	0.500	TWSQ050-S38
1.58	40.1	Hook Spanner	SXN16	WRENCH 40-42 HOOK	0.500	TWSQ050-S40
1.73	43.9	Hook Spanner	BC075, BCM20	WRENCH 45-48 HOOK	0.500	TWSQ050-S45
1.75	44.5	Hook Spanner	VX	WRENCH 45-48 PIN	0.500	TWSQ050-S45
1.75	44.5	Hook Spanner	DC050-BT30	WRENCH 45-48 HOOK		
1.89	48.0	Hook Spanner	DC050	WRENCH 45-48 HOOK		
1.97	50.0	Hook Spanner	TG075, ER32B	WRENCH 50-55 HOOK	0.500	TWSQ050-S55
1.98	50.3	Hook Spanner	SXN25M	WRENCH 50-55 HOOK	0.500	TWSQ050-S55
2.09	53.1	Hook Spanner	MC075	WRENCH 50-55 HOOK	0.500	TWSQ050-S55
2.12	53.8	Hook Spanner	BC100, BCM25	WRENCH 50-55 HOOK	0.500	TWSQ050-S55
2.17	55.1	Hook Spanner	SXN25	WRENCH 50-55 HOOK	0.500	TWSQ050-S55
2.44	62.0	Hook Spanner	MC100	WRENCH 58-65 HOOK	0.500	TWSQ050-S65
2.48	63.0	Hook Spanner	TG100	WRENCH 58-65 HOOK	0.500	TWSQ050-S65
2.56	65.0	Hook Spanner	BC125, BCM32	WRENCH 58-65 HOOK	0.500	TWSQ050-S65
2.76	70.1	Hook Spanner	MC125	WRENCH 65-70 HOOK	0.500	TWSQ050-S70
3.19	81.0	Hook Spanner	BC150	WRENCH 80-85 HOOK		
3.23	82.0	Hook Spanner	TG150	WRENCH 80-85 HOOK		
3.78	96.0	Hook Spanner	BC200	WRENCH 92-100 HOOK	0.750	TWSQ075-S96

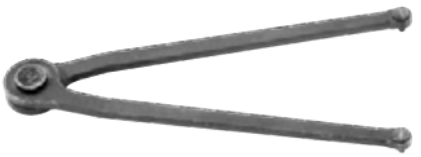

Nut Size	Metric	Type	Works On	Part Number
0.07	1.9	PIN SPANNER	COOLANT CAP	WRENCH SXW-CC

Nut Size	Metric	Type	Works On	Part Number
0.20	5.0	Hex (Allen)	MX	WRENCH MXW05

Wrenches

Hex

For Torque Values see page 140

Nut Size	Metric	Type	Works On	Part Number	Drive	Torque Wrench Head #
0.50	12.7	Hex (Open End)	DA300	WRENCH DAW300		
0.67	17.0	Hex (Open End)	ER11H	WRENCH ERW-11 HEX	0.375	TWSQ037-H17
0.71	18.0	Hex (Open End)	SXN06	WRENCH SXW-06 H	0.375	TWSQ037-H18
0.75	19.0	Hex (Open End)	DA200	WRENCH DAW200		
0.94	24.0	Hex (Open End)	DA100	WRENCH DAW100		
0.98	25.0	Hex (Open End)	ER16H	WRENCH ERW-16 HEX	0.500	TWSQ050-H254
1.00	25.4	Hex (Open End)	SXN10	WRENCH SXW-10 H	0.500	TWSQ050-H254
1.18	30.0	Hex (Open End)	ER20H	WRENCH ERW-20 HEX	0.500	TWSQ050-H30
1.26	32.0	Hex (Open End)	DA180, ER32H-EXT	WRENCH DAW180		TWSQ050-H318

E Type

For Torque Values see page 140

Nut Size	Metric	Type	Works On	Part Number	Drive	Torque Wrench Head #
1.26	32.0	E Type	ERN16	WRENCH ERW-16 E	0.500	TWSQ050-S32
1.38	35.0	E Type	ERN20	WRENCH ERW-20 E	0.500	TWSQ050-S38
1.65	42.0	E Type	ERN25	WRENCH ERW-25 E	0.500	TWSQ050-ER25E
1.97	50.0	E Type	ERN32	WRENCH ERW-32 E	0.500	TWSQ050-ER32E
2.48	63.0	E Type	ERN40	WRENCH ERW-40 E	0.500	TWSQ050-ER40E

Mini E Type

For Torque Values see page 140

Nut Size	Metric	Type	Works On	Part Number	Drive	Torque Wrench Head #
0.47	12.0	Mini E	ER08	WRENCH ERW- 8M		
0.63	16.0	Mini E	SX06M, ER11M	WRENCH ERW-11 M	0.250	TWSQ025-ER11M
0.87	22.1	Mini E	SX10M, ER16M	WRENCH ERW-16 M	0.250	TWSQ025-ER16M
1.10	28.0	Mini E	ER20M	WRENCH ERW-20 M		

Collet Chuck Tightening Torque

Below values are Maximum, do not over torque or damage to the chuck or collet may occur. Calibrate your torque wrench on a regular bases, use wrench manufacturer's speciation.

If any distortion is observed in the collet slots, back off the torque until the collet is restored to normal.

Collet Nut	Description	Wrench Type	Wrench #	Torque Wrench Head	Max. Torque	Max. Nm
BC037	BC037 MILL CHUCK NUT	Spanner		WRENCH TWSQ050-S38	100 ft/lbs	135 Nm
BC050	BC050 MILL CHUCK NUT	Spanner		WRENCH TWSQ050-S38	100 ft/lbs	135 Nm
BC062	BC062 MILL CHUCK NUT	Spanner		WRENCH TWSQ050-S38	120 ft/lbs	163 Nm
BC075	BC075 MILL CHUCK NUT	Spanner		WRENCH TWSQ050-S45	120 ft/lbs	163 Nm
BC100	BC100 MILL CHUCK NUT	Spanner		WRENCH TWSQ050-S55	140 ft/lbs	190 Nm
BC125	BC125 MILL CHUCK NUT	Spanner		WRENCH TWSQ050-S65	140 ft/lbs	190 Nm
SXN-06M	SX06 Nut - Mini E Type Wrench	Mini E	WRENCH ERW-11 M	WRENCH TWSQ025-ER11M	108 in/lbs	12 Nm
SXN-10M	SX10 Nut - Mini E Type Wrench	Mini E	WRENCH ERW-16 M	WRENCH TWSQ025-ER16M	156 in/lbs	17 Nm
SXN-25M	SX25 Nut - Mini Spanner Wrench	Spanner	WRENCH 50-55 HOOK	WRENCH TWSQ050-S55	85 ft/lbs	115 Nm
SXN-25MB	SX25 Bearing Nut - Mini Spanner	Spanner	WRENCH 50-55 HOOK	WRENCH TWSQ050-S55	120 ft/lbs	162 Nm
SXN-06H	SX06 Nut -Hex Wrench	Hex	WRENCH SXW-06 H	WRENCH TWSQ037-H18	22 ft/lbs	29 Nm
SXN-10H	SX10 Nut -Hex Wrench	Hex	WRENCH SXW-10 H	WRENCH TWSQ050-H254	41 ft/lbs	55 Nm
SXN-16S	SX16 Nut - Spanner Wrench	Spanner	WRENCH SXW-16 S	WRENCH TWSQ050-S40	55 ft/lbs	74 Nm
SXN-25S	SX25 Nut - Spanner Wrench	Spanner	WRENCH 50-55 HOOK	WRENCH TWSQ050-S55	85 ft/lbs	115 Nm
VX - All	VX12 - Pin Spanner Wrench	Pin Spanner	WRENCH 45-48 PIN	WRENCH TWSQ050-S45	30 ft/lbs	94 Nm
ERN-08M	ER08 Nut - Mini E Type Wrench	Mini E	WRENCH ERW- 8 M		48 in/lbs	5 Nm
ERN-11M	ER11 Nut - Mini E Type Wrench	Mini E	WRENCH ERW-11 M	WRENCH TWSQ025-ER11M	108 in/lbs	12 Nm
ERN-16M	ER16 Nut - Mini E Type Wrench	Mini E	WRENCH ERW-16 M	WRENCH TWSQ025-ER16M	156 in/lbs	17 Nm
ERN-20M	ER20 Nut - Mini E Type Wrench	Mini E	WRENCH ERW-20 M		17 ft/lbs	23 Nm
ERN-11H	ER11 Nut -Hex Wrench	Hex	WRENCH ERW-11 HEX	WRENCH TWSQ037-H17	18 ft/lbs	24 Nm
ERN-16H	ER16 Nut -Hex Wrench	Hex	WRENCH ERW-16 HEX	WRENCH TWSQ050-H254	40 ft/lbs	54 Nm
ERN-20H	ER20 Nut -Hex Wrench	Hex	WRENCH ERW-20 HEX	WRENCH TWSQ050-H30	60 ft/lbs	81 Nm
ERN-16B	ER16 Nut - Spanner Wrench	Spanner	WRENCH 30-32 HOOK	WRENCH TWSQ050-S32	40 ft/lbs	54 Nm
ERN-20B	ER20 Nut - Spanner Wrench	Spanner	WRENCH 34-38 HOOK	WRENCH TWSQ050-S38	60 ft/lbs	81 Nm
ERN-25B	ER25 Nut - Spanner Wrench	Spanner	WRENCH 40-42 HOOK	WRENCH TWSQ050-S40	75 ft/lbs	101 Nm
ERN-32B	ER32 Nut - Spanner Wrench	Spanner	WRENCH 50-55 HOOK	WRENCH TWSQ050-S55	100 ft/lbs	135 Nm
ERN-40B	ER40 Nut - Spanner Wrench	Spanner	WRENCH 58-65 HOOK	WRENCH TWSQ050-S65	125 ft/lbs	169 Nm
ERN-32H-EXT	ER32 Ext Thread Nut - Hex Wrench	Hex	WRENCH DAW180	WRENCH TWSQ050-H32	100 ft/lbs	135 Nm
ERN-16E	ER16 Nut - E Type Wrench	E Type	WRENCH ERW-16 E		40 ft/lbs	54 Nm
ERN-20E	ER20 Nut - E Type Wrench	E Type	WRENCH ERW-20 E		60 ft/lbs	81 Nm
ERN-25E	ER25 Nut - E Type Wrench	E Type	WRENCH ERW-25 E	WRENCH TWSQ050-ER25E	75 ft/lbs	101 Nm
ERN-32E	ER32 Nut - E Type Wrench	E Type	WRENCH ERW-32 E	WRENCH TWSQ050-ER32E	100 ft/lbs	135 Nm
ERN-40E	ER40 Nut - E Type Wrench	E Type	WRENCH ERW-40 E	WRENCH TWSQ050-ER40E	125 ft/lbs	169 Nm
TGN-075	TG075 Nut - Spanner Wrench	Spanner	WRENCH 50-55 HOOK	WRENCH TWSQ050-S55	55 ft/lbs	74 Nm
TGN-100	TG100 Nut - Spanner Wrench	Spanner	WRENCH 58-65 HOOK	WRENCH TWSQ050-S65	75 ft/lbs	101 Nm
TGN-150	TG150 Nut - Spanner Wrench	Spanner	WRENCH 80-85 HOOK		100 ft/lbs	135 Nm
DAN-300	DA300 Nut - Mini Hex	Mini Hex	WRENCH DAW300		20 ft/lbs	27 Nm
DAN-200	DA200 Nut - Mini Hex	Mini Hex	WRENCH DAW200		25 ft/lbs	33 Nm
DAN-100	DA100 Nut - Mini Hex	Mini Hex	WRENCH DAW100		35 ft/lbs	47 Nm
DAN-180	DA180 Nut - Mini Hex	Mini Hex	WRENCH DAW180		40 ft/lbs	54 Nm

ROTARY WIPER makes it possible to view the production/machining process clearly within the machine enclosure. The window will get dirty from oils, coolants and chips.

By installing ROTARY WIPER, even large amount of coolants, etc., will not prevent an operator from being able to observe set-ups and production runs of all sorts.

- Improved Visible Area
- Less Air Consumption & Lower Noise Level
- Easier Maintenance Work
- Improved Sealing Performance against Coolant (For Tape Fitting Type)
- Special chemically treated glass provides long life from chips and debris
- Low Profile for tight installation areas

Version 2 Refined Design

This air driven rotary window does not require special wiring like competitive models. Installation could not be more simple:

1. Choose your mount type (Bolt or Tape)
2. Install in machine per provided instructions
3. Run Air Cable to the machine control side air bank
4. Attached Air Cable to your Rotary Wiper

Done!

If RW window was to become damaged, easy removal of the 4 screws from the center hub makes window replacement easy.

Rotary Wiper is available in 2 different mountings, Bolt & Tape. Bolt mountings require 8 mounting screw holes in the windows. Tape on uses a high end adhesive with the only requirement is a clean window.


Tape Fitting


Bolt Fitting


Air Cable

Type	Mounting	Ø6mm Air Cable (Ø10mm Conduit)
RW-V2-25	Bolt Fitting Type	Ø6mm x 8.2 ft (2.5M)
RW-V2-50	Bolt Fitting Type	Ø6mm x 16.4 ft (5.0M)
RW-V2-T25	Tape Fitting Type	Ø6mm x 8.2 ft (2.5M)
RW-V2-T50	Tape Fitting Type	Ø6mm x 16.4 ft (5.0M)

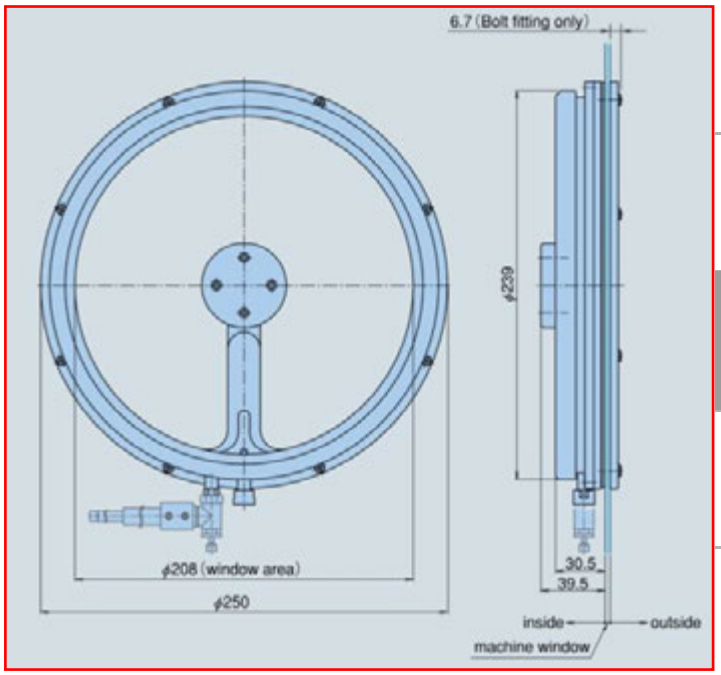

Bearing Type Locking Fixtures

- Bolts to Workbench
- Friction Locking, no drive slots required

HSK063 Shown

HSK100 Shown

Part Number	Shank
TL-BT30	BT30 / BT30-B
TL-HSK063	BT40 / BT40-B / CAT40 / CAT40-B / HSK063 A/E/F
TL-HSK100	HSK100 A/E/F
TL-CAT50	CAT50 / CAT50-B

2 Position Locking Fixtures

- Bolts to Workbench
- Easy Access to Retention Knob

Part Number	Shank
TLD-BT30	BT30 / BT30*
TLD-BT40	BT40 / BT40*
TLD-CAT40	CAT40 / CAT40*
TLD-CAT50	CAT50 / CAT50*

* Dual Contact only function in the Vertical Position

Tool Block

PIONEER's Flexible, Indexable Tool Block
with Interchangeable Heads!

The system is designed to prevent injury and allow the operator to move the holder into the best position for manipulation. 8 locking positions (45° apart) with auto lock provides the easiest and safest way of changing cutters and retention knobs. Interchangeable with heads from competitive systems, Tool Block is a must for all tool rooms.

Version 3 includes 1 piece body and 45° positions!

Order Tool Block Head and Base Separately!

Tool Block Head

Part Number	Shank
TB-BT30 HEAD	BT30-B / BT30 JMTBA MAS403
TB-BT40 HEAD	BT40-B / BT40 JMTBA MAS403
TB-CAT40 HEAD	CAT40, CAT40-B, ISO7388-40, DIN69871-40
TB-CAT50 HEAD	CAT50, CAT50-B, ISO7388-50, DIN69871-50
TB-HSK32A HEAD	DIN69893 HSK32-A
TB-HSK40A HEAD	DIN69893 HSK40-A
TB-HSK50A HEAD	DIN69893 HSK50-A
TB-HSK63A HEAD	DIN69893 HSK63-A
TB-HSK100A HEAD	DIN69893 HSK100-A

Tool Block Base

Part Number	Description
TB-BASE	(1) Base Required

Base includes Mounting Bolts & Hex Wrench

Note:

PIONEER Tool Block Base will accept competitor's Head Assemblies. Some versions of the competitor's bases will not accept PIONEER Tool Block Heads. An alteration or conversion bolt is required on the competitor's base.

Please contact PIONEER customer service for more information.

Assemble Tool Block Head to Base by rotating the Push Knob on the back of the Base

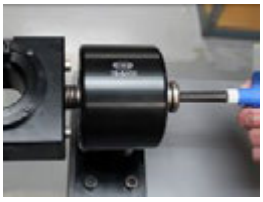

Optional: Assemble Tool Block Head to the Base by rotating the Push Knob on the back of the Base, Snug tighten with supplied 8mm Wrench

Push in on the Push Knob to unlock the head from the base

Rotate the knob to the desired location, the head will lock in 90 degree increments

The tool holder will snap in automatically.

PIONEER Rotary Tables

PIONEER offers Rotary solutions for todays shop needs.

PIONEER Rotary Tables are best in class performance and are a cost effective solution. Available in 170mm—2000mm with 4th, 5th axis options, PIONEER can help your shop produce at full protentional.

4th Axis or Indexer, which meets your needs?

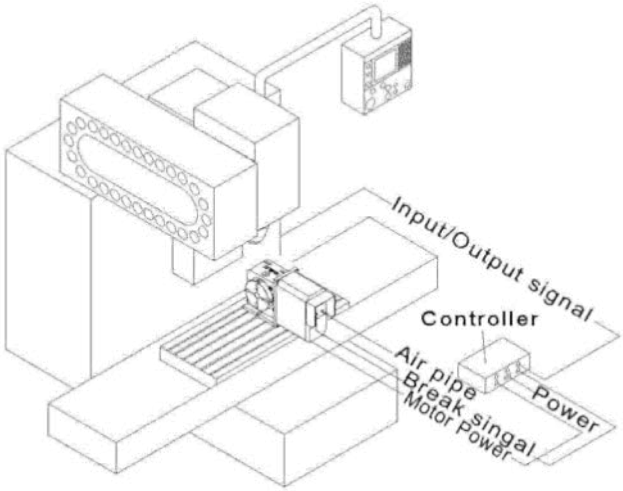

Illustration of an indexer connection

4th Axis	Indexer w/ Control Box
• Fully integrated into the machine control for synchronized operations • Uses machine control motor for guaranteed compatibility • Requires professional installation • Machine must be 4th axis ready	• Uses a control box to connect to the machine control for position / cut operations • Controlled with M Code for start stop operations or programming with Macro β with compatible machine control • Can be easily moved from machine to machine • Can be installed by the customer

Need your table installed?

Looking for something heavy duty?

PIONEER offers a complete line of tables in both standard and heavy duty to meet your application needs.

Contact our customer service for more information.

PIONEER put the highest level of technology and engineering together to build the CNC Rotary Tables that have the power to perform.

Durable and Rigid Dual-Lead Gear System

All PIONEER tables use a combination of case hardened special alloy dual-lead screw that has a larger shaft diameter and special high tensile strength brass worm wheel that ensures exceptional wear resistance and long durability for the life of the gear system.

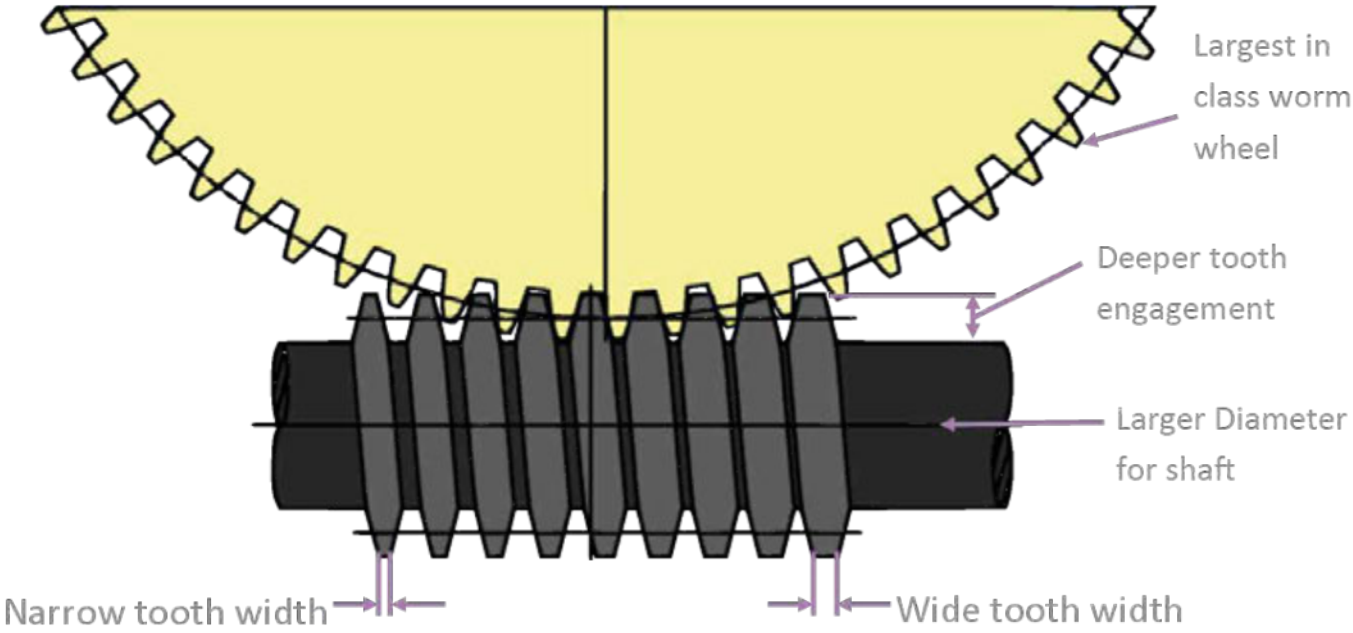

Adjustment of back lash is easy and quick!

AX4-171R-IDX

Table, Controller, Motor & Cable Set

Specifications

AX4-171R	Inch	Metric
Table Dia.	6.69	170 mm
Center height	6.30	160 mm
Through hole	1.38	35 mm
Accuracy	+/- 12.5 sec	
Max. weight limit (V)	165 lbs	75 kg
Max. weight limit (H)	330 lbs	150 kg
Brake system	Pneumatic	
Brake torque	181 ft-lbs	245 N-m
Max. rpm	33.3 rpm	
Gear ratio	1/90	
Position	Vertical/Horizontal	
Weight	185 lbs	84 kg
Motor	Delta ECMA-E11310RS	

*Photo shows generic image of the product and may be different from actual product.

EZX-310 Control

- 15 sets of program, 90 steps for each program
- 0.001° degree minimum increment
- Macro β Functionality
- Power, feedback, M-signal, and power supply cable included
- RS232C capable
- 14”W x 10.5”H x 12.5”D

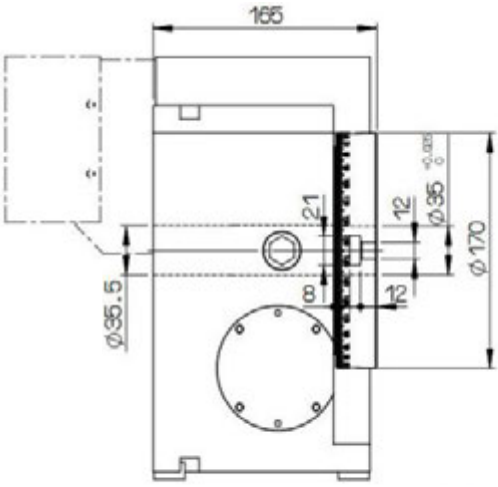

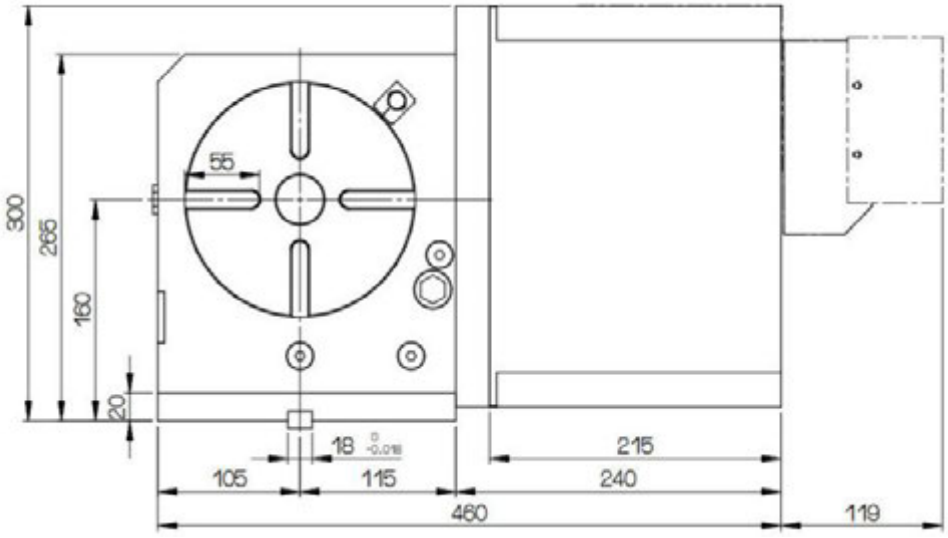

AX4-171R-IDX Accessories

Hand Controller
#MPG-1

6" 3 Jaw Scroll Chuck w/ Adapter Plate
#SC-6 SCROLL CHUCK & #SC-6 ADP-170

5C Manual Chuck w/ Adapter Plate
#ACSU-5C MANUAL CHUCK & #SC-6-M5C-ADP-170

Pneumatic / Hydraulic Side Table
#TS-A200S (P/H) TAILSTOCK
160mm Center Height, 200mm Face Plate

5C Air Chuck Kit
#DACC-170-KIT

Manual Tail Stock
#TS-A160 TAILSTOCK

Pneumatic / Hydraulic Tail Stock
#TS-A160 (P/H) TAILSTOCK

AX4-200R-IDX

Table, Controller, Motor & Cable Set

Specifications

AX4-200R	Inch	Metric
Table Dia.	7.87	200 mm
Center height	6.30	160 mm
Through hole	1.38	35 mm
Accuracy	+/- 12.5 sec	
Max. weight limit (V)	220 lbs	100 kg
Max. weight limit (H)	440 lbs	200 kg
Brake system	Pneumatic Standard	
Air Brake torque	181 ft-lbs	245 Nm
*Optional Hyd Brake torque	351 ft-lbs	490 Nm
Max. rpm	22.2 rpm	
Gear ratio	1/90	
Position	Vertical/Horizontal	
Weight	185 lbs	84 kg
Motor	Delta ECMA-E11310RS	

* Must be ordered Hydraulic, additional booster required.

*Photo shows generic image of the product and may be different from actual product.

EZX-310 Control

- 15 sets of program, 90 steps for each program
- 0.001° degree minimum increment
- Macro β Functionality
- Power, feedback, M-signal, and power supply cable included
- RS232C capable
- 14”W x 10.5”H x 12.5”D

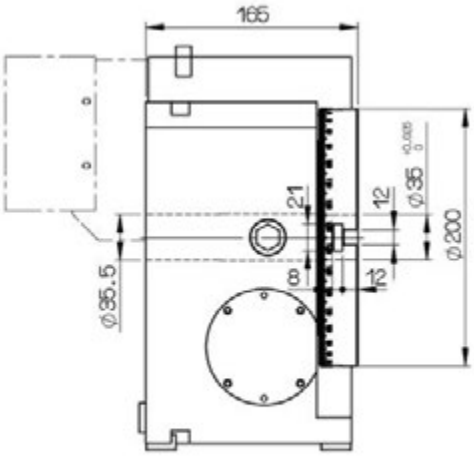

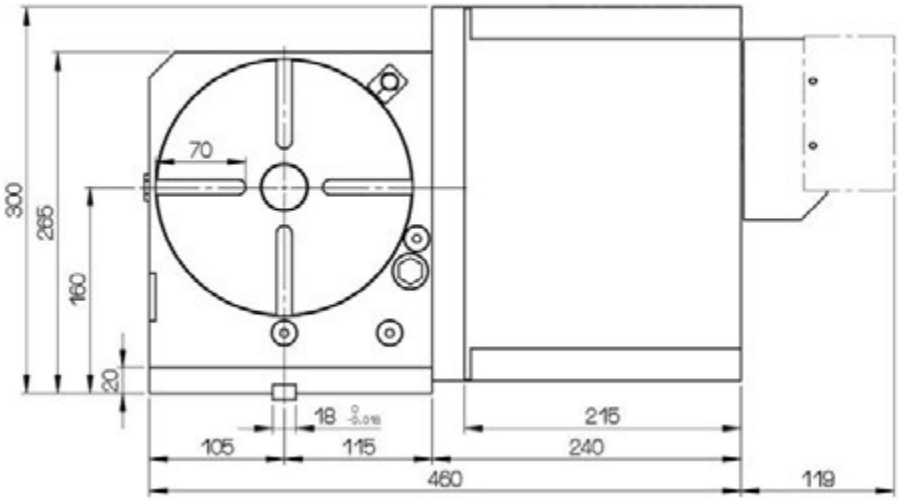

AX4-200R-IDX Accessories

Hand Controller
#MPG-1

8" 3 Jaw Scroll Chuck w/ Adapter Plate
#SC-8 SCROLL CHUCK & #SC-8-ADP-200

5C Manual Chuck w/ Adapter Plate
#ACSU-5C MANUAL CHUCK & #SC-8-M5C-ADP-200

Pneumatic / Hydraulic Side Table
#TS-A200S (P/H) TAILSTOCK
160mm Center Height, 200mm Face Plate

5C Air Chuck Kit
#DACC-200-KIT

Manual Tail Stock
#TS-A160 TAILSTOCK

Pneumatic / Hydraulic Tail Stock
#TS-A160 (P/H) TAILSTOCK

AX4-250R-IDX

Table, Controller, Motor & Cable Set

Specifications

AX4-250R	Inch	Metric
Table Dia.	9.84	250 mm
Center height	7.28	185 mm
Through hole	2.76	70 mm
Accuracy	+/- 10 sec	
Max. weight limit (V)	275 lbs	125 kg
Max. weight limit (H)	660 lbs	300 kg
Brake system	Pneumatic Standard	
Air Brake torque	340 ft-lbs	461 Nm
*Optional Hyd Brake torque	679 ft-lbs	921 Nm
Max. rpm	22.2 rpm	
Gear ratio	1/90	
Position	Vertical/Horizontal	
Weight	275 lbs	124 kg
Motor	Delta ECMA-E11315RS	

* Must be ordered Hydraulic, additional booster required.

*Photo shows generic image of the product and may be different from actual product.

EZX-315 Control

- 15 sets of program, 90 steps for each program
- 0.001° degree minimum increment
- Macro β Functionality
- Power, feedback, M-signal, and power supply cable included
- RS232C capable
- 14”W x 10.5”H x 12.5”D

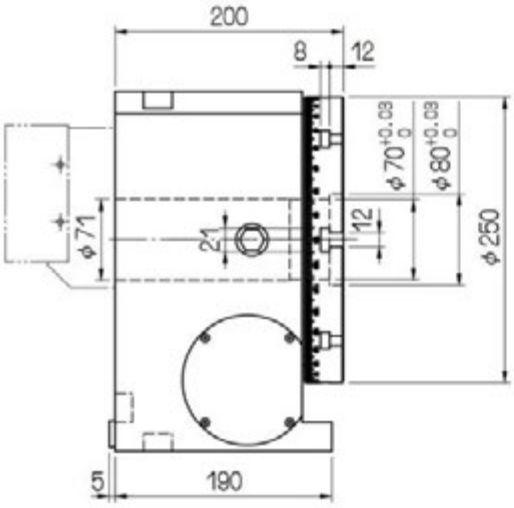

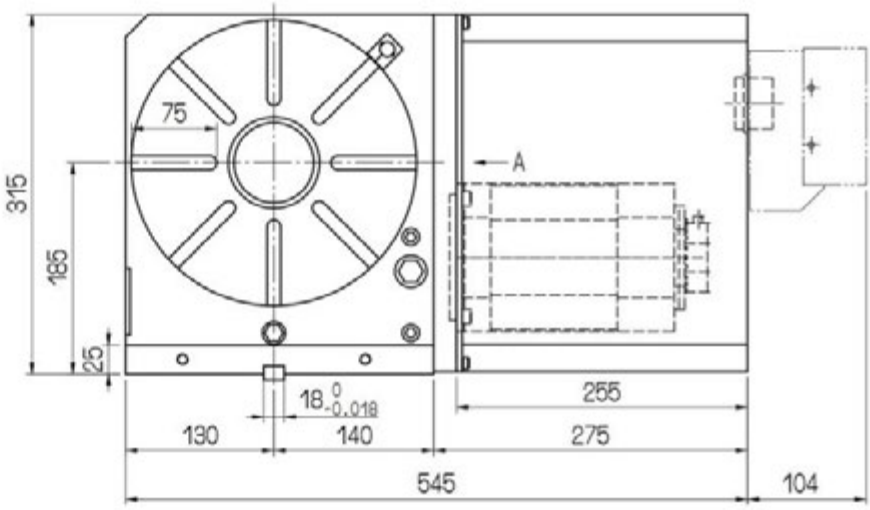

AX4-250R-IDX Accessories

Hand Controller
#MPG-1

10" 3 Jaw Scroll Chuck w/ Adapter Plate
#SC-10 SCROLL CHUCK & #SC-10-ADP-250

5C Manual Chuck w/ Adapter Plate
#ACSU-5C MANUAL CHUCK & #SC-10-M5C-ADP-250

Pneumatic / Hydraulic Side Table
#TS-A251S (P/H) TAILSTOCK
185mm Center Height, 250mm Face Plate

5C Air Chuck Kit
#DACC-200-KIT

Manual Tail Stock
#TS-B185 TAILSTOCK

Pneumatic / Hydraulic Tail Stock
#TS-B185 (P/H) TAILSTOCK

AX4-320R-IDX

Table, Controller, Motor & Cable Set

Hydraulic Booster Required

Specifications

AX4-320R	Inch	Metric
Table Dia.	12.6	320 mm
Center height	8.27	210 mm
Through hole	4.33	110 mm
Accuracy	+/- 10 sec	
Max. weight limit (V)	330 lbs	150 kg
Max. weight limit (H)	770 lbs	350 kg
Brake system	Hydraulic	
Brake torque Hyd	1,025 ft-lbs	1,398 Nm
Max. rpm	22.2 rpm	
Gear ratio	1/90	
Position	Vertical/Horizontal	
Weight	463 lbs	210 kg
Motor	Delta ECMA-E11830RS	
Hyd. Booster	Quote on Demand	

*Photo shows generic image of the product and may be different from actual product.

EZX-830 Control

- 15 sets of program, 90 steps for each program
- 0.001° degree minimum increment
- Macro β Functionality
- Power, feedback, M-signal, and power supply cable included
- RS232C capable
- 14”W x 10.5”H x 12.5”D

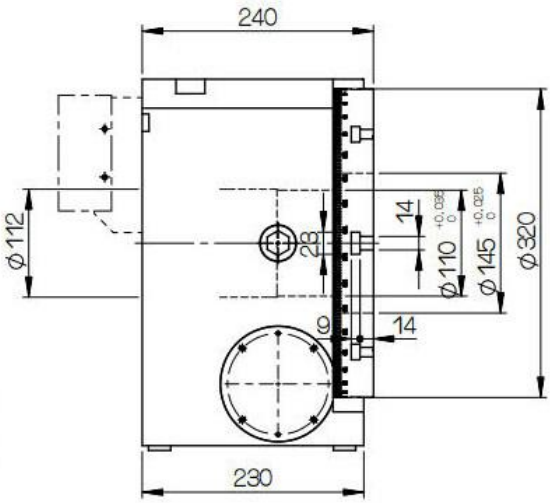

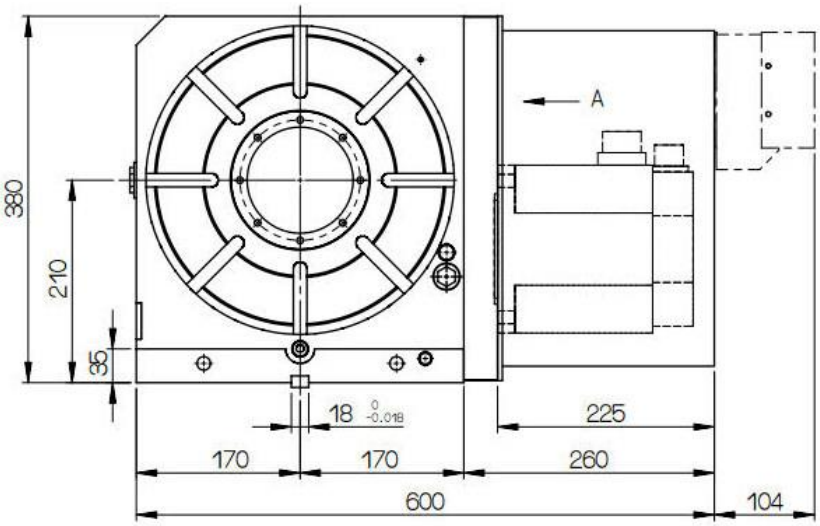

AX4-320R-IDX Accessories

Hand Controller
#MPG-1

12” 3 Jaw Scroll Chuck w/ Adapter Plate
#SC-12 SCROLL CHUCK & #SC-12-ADP-320

Pneumatic / Hydraulic Side Table
#TS-A320S (P/H) TAILSTOCK
185mm Center Height, 250mm Face Plate

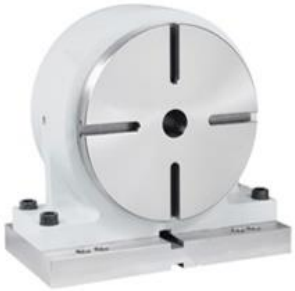

Manual Tail Stock
#TS-B210 TAILSTOCK

Pneumatic / Hydraulic Tail Stock
#TS-B210 (P/H) TAILSTOCK

AX4-400R-IDX

Table, Controller, Motor & Cable Set

Hydraulic Booster Required

Specifications

AX4-400R	Inch	Metric
Table Dia.	15.75	400 mm
Center height	9.84	250 mm
Through hole	5.91	150 mm
Accuracy	+/- 7.5 sec	
Max. weight limit (V)	660 lbs	300 kg
Max. weight limit (H)	1,100 lbs	500 kg
Brake system	Hydrualic	
Hyd brake torque	1,330 ft-lbs	1,803 Nm
Max. rpm	22.2 rpm	
Gear ratio	1/90	
Position	Vertical/Horizontal	
Weight	616 lbs	280 kg
Motor	Delta ECMA-E11830RS	
Hyd. Booster	Quote on Demand	

*Photo shows generic image of the product and may be different from actual product.

EZX-830 Control

- 15 sets of program, 90 steps for each program
- 0.001° degree minimum increment
- Macro β Functionality
- Power, feedback, M-signal, and power supply cable included
- RS232C capable
- 14”W x 10.5”H x 12.5”D

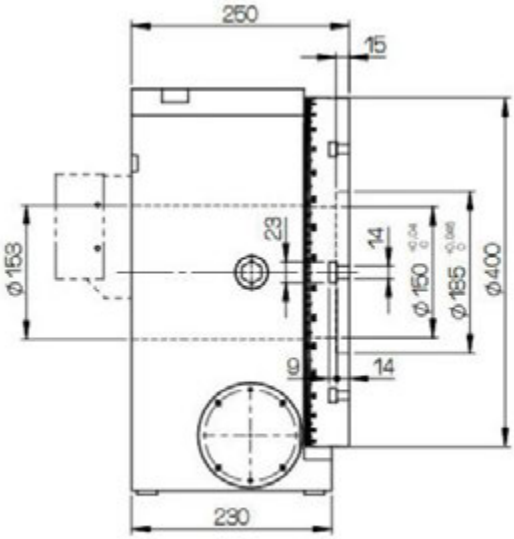

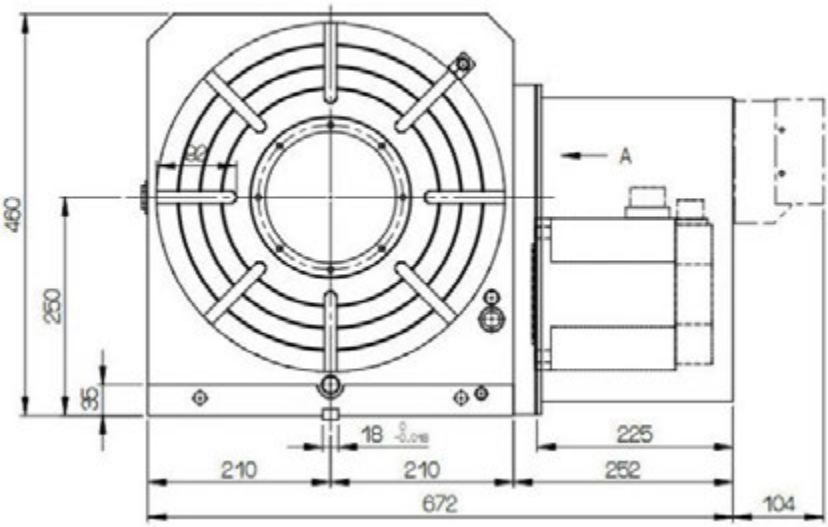

AX4-400R-IDX Accessories

Hand Controller
#MPG-1

Manual Tail Stock
#TS-B250 TAILSTOCK

Pneumatic / Hydraulic Tail Stock
#TS-B250 (P/H) TAILSTOCK

AX4-500R-IDX

Table, Controller, Motor & Cable Set

Hydraulic Booster Required

Specifications

AX4-500R	Inch	Metric
Table Dia.	19.68	500 mm
Center height	12.2	300 mm
Through hole	7.09	180 mm
Accuracy	+/- 7.5 sec	
Max. weight limit (V)	770 lbs	400 kg
Max. weight limit (H)	1,320 lbs	800 kg
Brake system	Hydualic	
Hyd brake torque	1,807 ft-lbs	6,680 Nm
Max. rpm	16.7 rpm	
Gear ratio	1/120	
Position	Vertical/Horizontal	
Weight	836 lbs	380 kg
Motor	Delta ECMA-E11830RS	
Hyd. Booster	Quote on Demand	

*Photo shows generic image of the product and may be different from actual product.

EZX-830 Control

- 15 sets of program, 90 steps for each program
- 0.001° degree minimum increment
- Macro β Functionality
- Power, feedback, M-signal, and power supply cable included
- RS232C capable
- 14”W x 10.5”H x 12.5”D

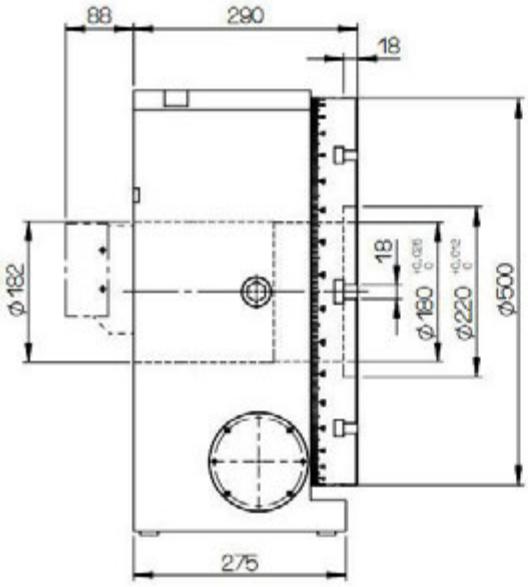

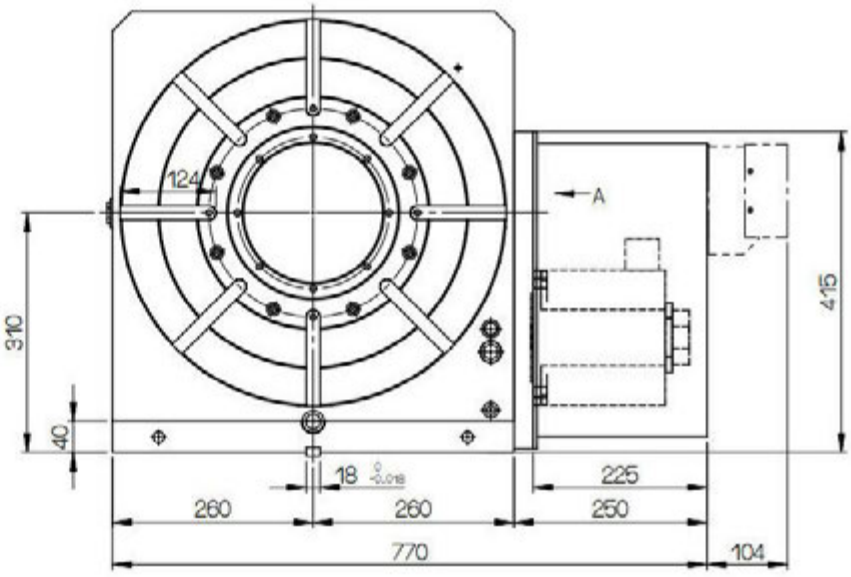

AX4-500R-IDX Accessories

Hand Controller
#MPG-1

Manual Tail Stock
#TS-C310 TAILSTOCK

Pneumatic / Hydraulic Tail Stock
#TS-C310 (P/H) TAILSTOCK

PIONEER EDM Rotary Tables

PIONEER EDM tables are fully sealed with positive air pressure and check valve system.

PIONEER EDM Rotary Tables are best in class performance and are a cost effective solution. Available in 140mm—250mm with 4th, 5th axis options, PIONEER can supply an EDM option to meet your needs.

Pioneer EDM Rotary are available in 2 configurations, EDW for Wire, EDS for Sinker machines.

EDW Wire:	EDS Sinker:
• Stainless Steel Faceplate • Communicator block to ground the face plate • Nickel plating • High Performance Seals • Stainless Steel Screws	• Stainless Steel Faceplate • Optional Nickel plating • High Performance Seals • Stainless Steel Screws

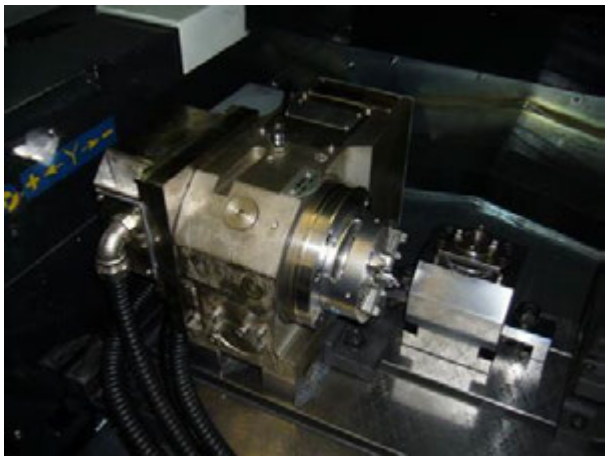

4th Axis or Indexer, which meets your needs?

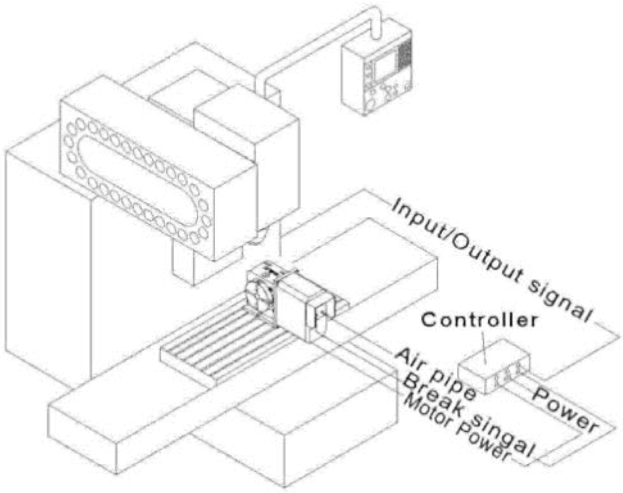

Illustration of an indexer connection

4th Axis	Indexer w/ Control Box
• Fully integrated into the machine control for synchronized operations • Uses machine control motor for guaranteed compatibility • Requires professional installation • Machine must be 4th axis ready	• Uses a control box to connect to the machine control for position / cut operations • Controlled with M Code for start stop operations or programming with Macro β with compatible machine control • Can be easily moved from machine to machine • Can be installed by the customer

JNC140R-AC5-10-EDW

EDW configuration for Wire EDM applications.
Table, Controller, Motor & Cable Set

Specifications

JNC140	Inch	Metric
Table Dia.	5.51	140 mm
Center height	4.33	110 mm
Through hole	1.10	28 mm
Accuracy	Within 40 sec. cumulatively	
Repeatability	Within 4 sec.	
Max. load horizontal	880 lbs	4,000 N
Max. load vertical	440 lbs	2,000 N
Brake system	Pneumatic	
Brake torque	89 ft-lbs	120 N-m
Max. rpm	41.6 rpm	
Gear ratio	1/72	
Position	Vertical/Horizontal	
Weight	60 lbs	27 kg
Motor	Fanuc Beta0.5/1is size	

*Photo shows generic image of the product and may be different from actual product.
Stainless Steel Face Plate & Communicator Block not shown

AC5-10 control

- 10,000 block capacity, Bi-directional
- 0.0001° degree minimum increment
- Power, feedback, M-signal, and power supply cable included.
- RS232C capable
- W 10.25” x H 8” x D9”

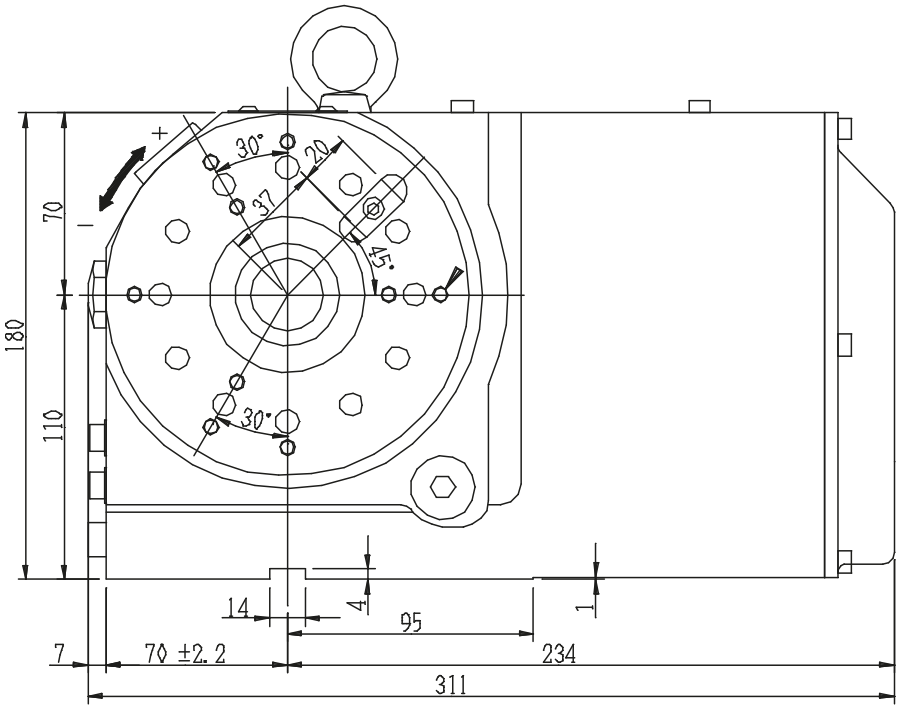

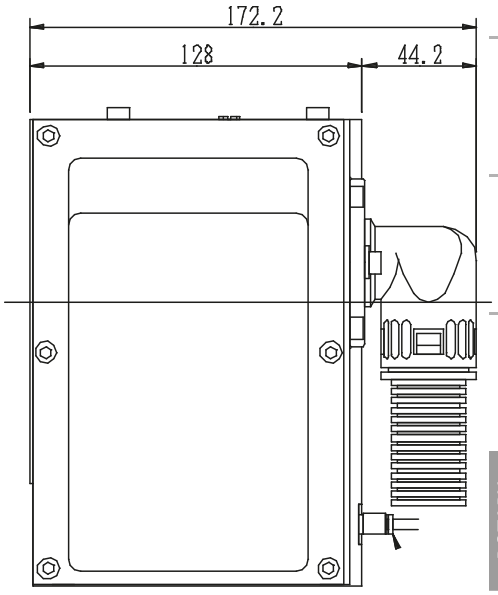

PIONEER
ABREMAQ
PODER PARA TRANSFORMAR
159

JET-BLAST Coolant Options

Jet-Blast has been proven over the last 10 years to double tool life in many applications by blasting the chips out of the cut allowing the cutting tool to cut free increasing efficiency and life.

Jet-Blast is a modification we perform at Pioneer by adding coolant ports to holders in stock. The amount of coolant ports and sizes are dependent on the customer and application. Pioneer will EDM in 2 ports standard, additional ports at a per hole fee.

Jet-Blast can be applied to all tool holders 10” and shorter from inventory, all sealed collets and coolant caps.

Coolant Volume, Pressure and RPM will determine the effectiveness of the Jet-Blast system.

2 - Port Jet-Blast

Same tool shot with a High Speed Shutter

Examples

PIONEER

ABREMAC
PODER PARA TRANSFORMAR

Large or Small, PIONEER Rotary has a cost effective solution for your application

PIONEER brings an Installation and Service department SECOND TO NONE

PIONEER brings an Installation and Service department second to none, with over 20 years experience in full rotary table 4th and 5th Axis installations as well as repair and service on many popular brands.

- Full Turnkey Installations on many Fanuc based controls including Fanuc 0i, 16i, 18i, 21i series and more.
- Guaranteed Compatibility - We only install OEM Motors & Controllers to guarantee 100% compatibility with the machine control.

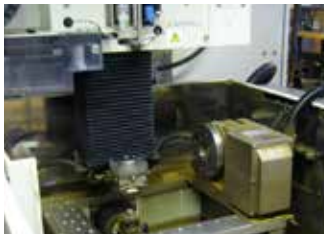

PIONEER EDM

Thanks to excellent water protection by patented auto air purging and optional corrosion protection plating or paint, JNC and TNT models are available as most affordable EDM rotary and indexing solution.

JNC Models **JNC140 / JNC170 / JNC200 / JNC250**

- Available in 5.5 / 6.7 / 7.9 / 9.8 inch table diameter
- Submersible with standard Auto Air Purging System (PAT)
- Optional stainless face plate with commutator block
- Optional nickel plating for better corrosion protection

TNT models **TNT100 / TNT170**

- Available in 3.9 / 6.7 inch table diameter
- Submersible with standard Auto Air Purging System (PAT)
- Optional stainless face plate with commutator block
- Optional rust preventative paint for better corrosion protection

ABREMAQ
PODER PARA TRANSFORMAR

The PIONEER Group

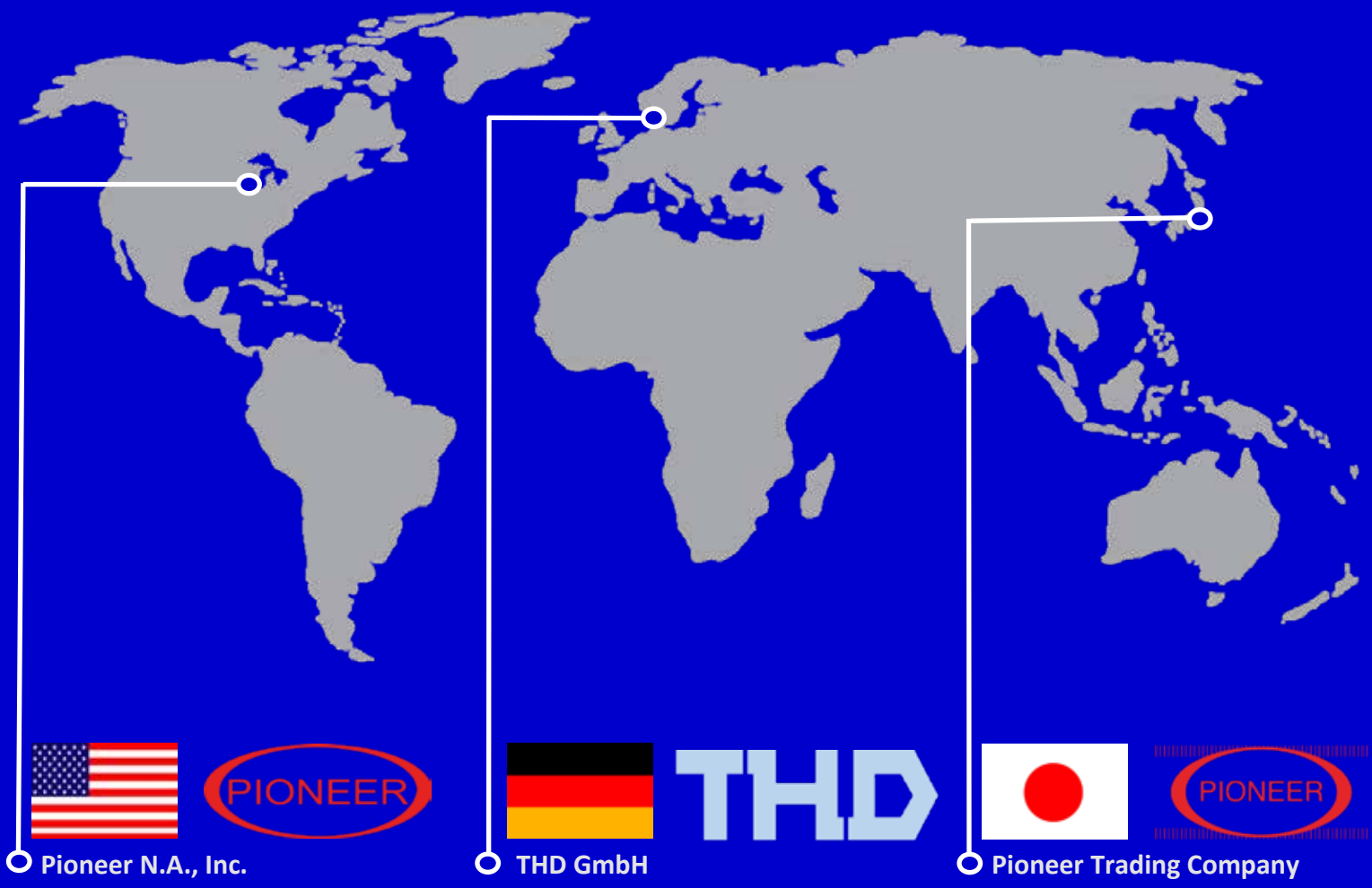

ABREMAQ
PODER PARA TRANSFORMAR

Contáctanos:

Calle 8 #2548, C.P. 44940, Zona Industrial, Guadalajara, Jal.

Tel. +52 1 (33) 3650 2040

ventas@abremaq.com

www.**abremaq**.com

Síguenos: